chanhvinh.com



# Adjustable Clamping Levers • inner parts from stainless steel, with female thread
EH 24390.



## Product Description

Adjustable clamping levers with rust-proof inner parts. Suitable for multiple applications, e.g. medical environments, chemical industry, and so on.

### Material

**Lever**
- Zinc die-cast, plastic coated, orange similar to RAL 2004, matt structure
- Zinc die-cast, plastic coated, black, similar to RAL 9005, matt structure

**Threaded part**
- Stainless steel 1.4305

**Inner parts**
- Stainless steel 1.4305

### Operation

**By lifting the lever** the serrations are disengaged. The lever can be positioned by the serrations. On releasing the lever, the serrations are automatically re-engaged.

**More information**

### Notes

The threaded portion can be exchanged.

## Drawing

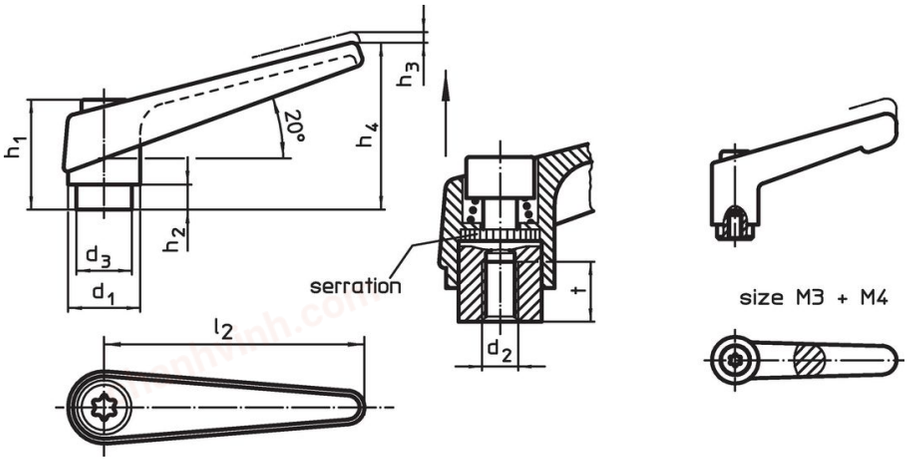


## Order information

| Dimensions | | | | | | | | | | Art. No. |
|---|---|---|---|---|---|---|---|---|---|---|
| $d_1$ | $d_2$ | $d_3$ | $h_1$ | $h_2$ | $h_3$ | $h_4$ | $l_2$ | t ≥ | | |
| | | | | [mm] | | | | | [g] | |
| **orange** | | | | | | | | | | |
| **13** | **M 3** | 10.0 | 24.5 | 4.0 | 3.5 | 30.5 | 30 | 7 | 26 | 24390.0032 |
| **13** | **M 4** | 10.0 | 24.5 | 4.0 | 3.5 | 30.5 | 30 | 9 | 25 | 24390.0036 |
| **14** | **M 5** | 10.0 | 24.5 | 4.0 | 3.0 | 35.0 | 45 | 8 | 33 | 24390.0111 |
| **14** | **M 6** | 10.0 | 24.5 | 4.0 | 3.0 | 35.0 | 45 | 8 | 33 | 24390.0121 |
| **18** | **M 8** | 13.5 | 31.0 | 6.5 | 3.0 | 45.0 | 62 | 10 | 67 | 24390.0321 |
| **22** | **M 8** | 16.0 | 36.0 | 8.0 | 3.5 | 52.0 | 74 | 14 | 112 | 24390.0411 |
| **22** | **M10** | 16.0 | 36.0 | 8.0 | 3.5 | 52.0 | 74 | 14 | 109 | 24390.0421 |
| **25** | **M10** | 19.0 | 43.0 | 11.0 | 4.0 | 63.0 | 89 | 17 | 175 | 24390.0511 |
| **25** | **M12** | 19.0 | 43.0 | 11.0 | 4.0 | 63.0 | 89 | 17 | 171 | 24390.0521 |
| **30** | **M12** | 23.0 | 50.5 | 12.0 | 5.0 | 76.0 | 108 | 22 | 286 | 24390.0611 |
| **30** | **M16** | 23.0 | 50.5 | 12.0 | 5.0 | 76.0 | 108 | 22 | 269 | 24390.0621 |
| **black** | | | | | | | | | | |
| **13** | **M 3** | 10.0 | 24.5 | 4.0 | 3.5 | 30.5 | 30 | 7 | 26 | 24390.0034 |
| **13** | **M 4** | 10.0 | 24.5 | 4.0 | 3.5 | 30.5 | 30 | 9 | 28 | 24390.0038 |
| **14** | **M 5** | 10.0 | 24.5 | 4.0 | 3.0 | 35.0 | 45 | 8 | 33 | 24390.0114 |
| **14** | **M 6** | 10.0 | 24.5 | 4.0 | 3.0 | 35.0 | 45 | 8 | 33 | 24390.0124 |
| **18** | **M 8** | 13.5 | 31.0 | 6.5 | 3.0 | 45.0 | 62 | 10 | 67 | 24390.0324 |
| **22** | **M 8** | 16.0 | 36.0 | 8.0 | 3.5 | 52.0 | 74 | 14 | 112 | 24390.0414 |
| **22** | **M10** | 16.0 | 36.0 | 8.0 | 3.5 | 52.0 | 74 | 14 | 109 | 24390.0424 |

chanhvinh.com



| Dimensions | | | | | | | | | | Art. No. |
|---|---|---|---|---|---|---|---|---|---|---|
| $d_1$ | $d_2$ | $d_3$ | $h_1$ | $h_2$ | $h_3$ | $h_4$ | $l_2$ | t ≥ | | |
| | | | | [mm] | | | | | [g] | |
| **25** | **M10** | 19.0 | 43.0 | 11.0 | 4.0 | 63.0 | 89 | 17 | 175 | 24390.0514 |
| **25** | **M12** | 19.0 | 43.0 | 11.0 | 4.0 | 63.0 | 89 | 17 | 171 | 24390.0524 |
| **30** | **M12** | 23.0 | 50.5 | 12.0 | 5.0 | 76.0 | 108 | 22 | 286 | 24390.0614 |
| **30** | **M16** | 23.0 | 50.5 | 12.0 | 5.0 | 76.0 | 108 | 22 | 269 | 24390.0624 |

## Application example

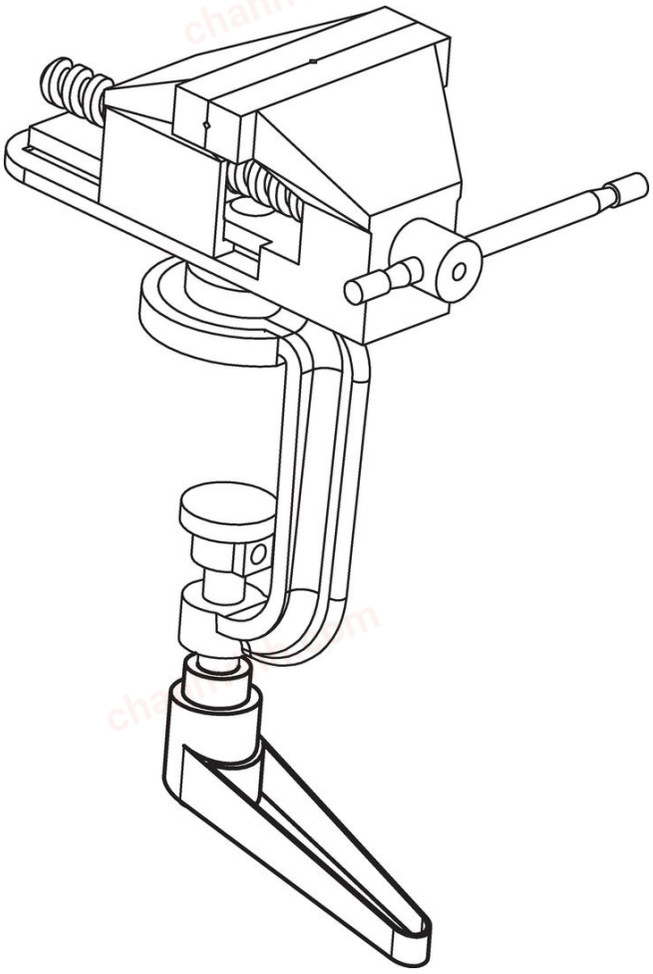

chanhvinh.com



## Compliance

### RoHS-compliant
Compliant with Directive 2011/65/EU [RoHS].

### Does not contain SVHC substances
No SVHC substances with more than 0.1% w/w contained - SVHC list [REACH] as of 04.02.2026.

### SCIP-code
e4b2236f-67ea-48b6-89c7-2c88d41f6b8a

### Contains Proposition 65 substances

Nickel can cause cancer from exposure.
https://www.P65Warnings.ca.gov/

### Free from Conflict Minerals
This product does not contain any substances designated as "conflict minerals" such as tantalum, tin, gold or tungsten from the Democratic Republic of Congo or adjacent countries.

### POP-compliant
Contains no persistent organic pollutants – Stockholm Convention [POP] as of September 2025.

### PFAS-compliant
Contains no per- and polyfluoroalkyl substances (PFAS).

### TSCA-compliant
Agent concentration in this product does not exceed the specified threshold.