chanhvinh.com

Gear Lever Handles

EH 24350.



Product Description

Material

Gear lever handle
- Steel, zinc-plated by galvanization, passivated
- Stainless steel 1.4305, dull blasted

Ball knob
- Thermosetting plastic PF 31, black, DIN 319

Cylindrical handle
- Thermosetting plastic PF 31, black

Drawing

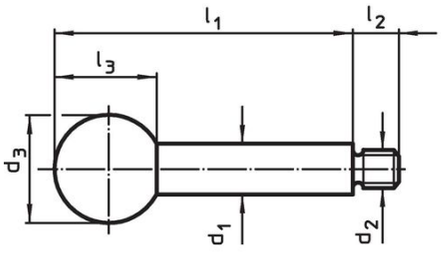

picture 1

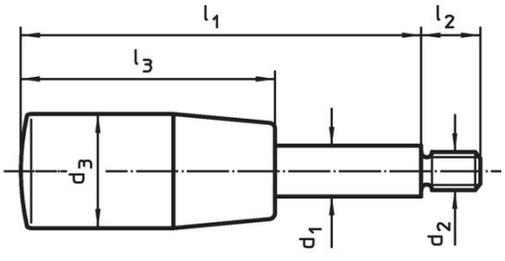

picture 2

Order information

Dimensions								Art. No.
d_1	l_1	d_2	d_3	l_2	l_3	max. [°C]	[g]	
		[mm]						
with spherical knob – picture 1, Steel								
8	**63**	M 6	20	9	18.0	110	30	24350.0020
8	**80**	M 6	20	9	18.0	110	34	24350.0022
8	**100**	M 6	20	9	18.0	110	39	24350.0024
10	**80**	M 8	25	11	22.5	110	50	24350.0030
10	**100**	M 8	25	11	22.5	110	62	24350.0032
10	**125**	M 8	25	11	22.5	110	13	24350.0034
12	**100**	M10	32	14	29.0	110	96	24350.0040
12	**125**	M10	32	14	29.0	110	13	24350.0042
12	**160**	M10	32	14	29.0	110	149	24350.0044
14	**125**	M12	35	16	32.5	110	157	24350.0050
14	**160**	M12	35	16	32.5	110	203	24350.0052
14	**200**	M12	35	16	32.5	110	253	24350.0054
16	**160**	M14	40	18	37.0	110	65	24350.0060
16	**200**	M14	40	18	37.0	110	332	24350.0062
16	**250**	M14	40	18	37.0	110	397	24350.0064
with cylindrical handle – picture 2, Steel								
8	**63**	M 6	18	9	40.0	110	26	24350.0120
8	**80**	M 6	18	9	40.0	110	33	24350.0122
8	**100**	M 6	18	9	40.0	110	42	24350.0124
10	**80**	M 8	21	11	50.0	110	50	24350.0130
10	**100**	M 8	21	11	50.0	110	62	24350.0132
10	**125**	M 8	21	11	50.0	110	78	24350.0134
12	**100**	M10	23	14	65.0	110	81	24350.0140
12	**125**	M10	23	14	65.0	110	26	24350.0142
12	**160**	M10	23	14	65.0	110	133	24350.0144
14	**125**	M12	26	16	80.0	110	131	24350.0150
14	**160**	M12	26	16	80.0	110	168	24350.0152

chanhvinh.com

Dimensions								Art. No.
d_1	l_1	d_2	d_3	l_2	l_3	max.		
[mm]						[°C]	[g]	
14	**200**	M12	26	16	80.0	110	216	24350.0154
16	**160**	M14	28	18	90.0	110	214	24350.0160
16	**200**	M14	28	18	90.0	110	273	24350.0162
16	**250**	M14	28	18	90.0	110	352	24350.0164
with spherical knob – picture 1, Stainless steel								
8	**63**	M 6	20	9	18.0	110	30	24350.0520
8	**80**	M 6	20	9	18.0	110	33	24350.0522
8	**100**	M 6	20	9	18.0	110	44	24350.0524
10	**80**	M 8	25	11	22.5	110	55	24350.0530
10	**100**	M 8	25	11	22.5	110	63	24350.0532
10	**125**	M 8	25	11	22.5	110	78	24350.0534
12	**100**	M10	32	14	29.0	110	97	24350.0540
12	**125**	M10	32	14	29.0	110	120	24350.0542
12	**160**	M10	32	14	29.0	110	154	24350.0544
14	**125**	M12	35	16	32.5	110	159	24350.0550
14	**160**	M12	35	16	32.5	110	202	24350.0552
14	**200**	M12	35	16	32.5	110	250	24350.0554
with cylindrical handle – picture 2, Stainless steel								
8	**63**	M 6	18	9	40.0	110	27	24350.0620
8	**80**	M 6	18	9	40.0	110	33	24350.0622
8	**100**	M 6	18	9	40.0	110	41	24350.0624
10	**80**	M 8	21	11	50.0	110	50	24350.0630
10	**100**	M 8	21	11	50.0	110	62	24350.0632
10	**125**	M 8	21	11	50.0	110	78	24350.0634
12	**100**	M10	23	14	65.0	110	81	24350.0640
12	**125**	M10	23	14	65.0	110	103	24350.0642
12	**160**	M10	23	14	65.0	110	142	24350.0644
14	**125**	M12	26	16	80.0	110	125	24350.0650
14	**160**	M12	26	16	80.0	110	168	24350.0652
14	**200**	M12	26	16	80.0	110	216	24350.0654

Application example

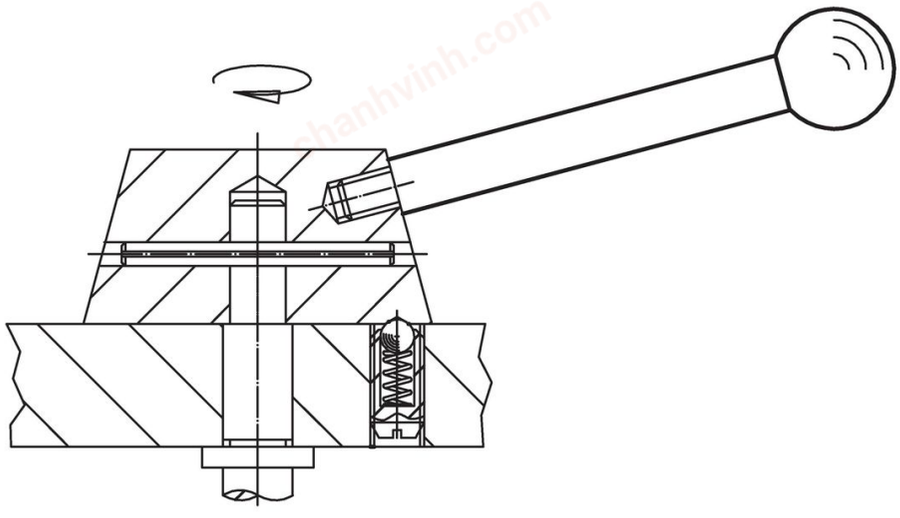

Compliance

For detailed compliance information please select the desired article number.