chanhvinh.com

Crank Handles • with folding handle

EH 24331.



Product Description

Material

Axle part
- Steel, blackened

Handle
- Thermoplastic, black, dull

Handle body
- Aluminium, plastic coated, similar to RAL 9006 silver, structural matt
- Aluminium, plastic coated, similar to RAL 9005 black, matt structure

Covering
- Plastic, light grey

Operation

In the operating position the handle is locked. To move the handle to the rest position, it must be pulled out axially and flipped round.

Drawing

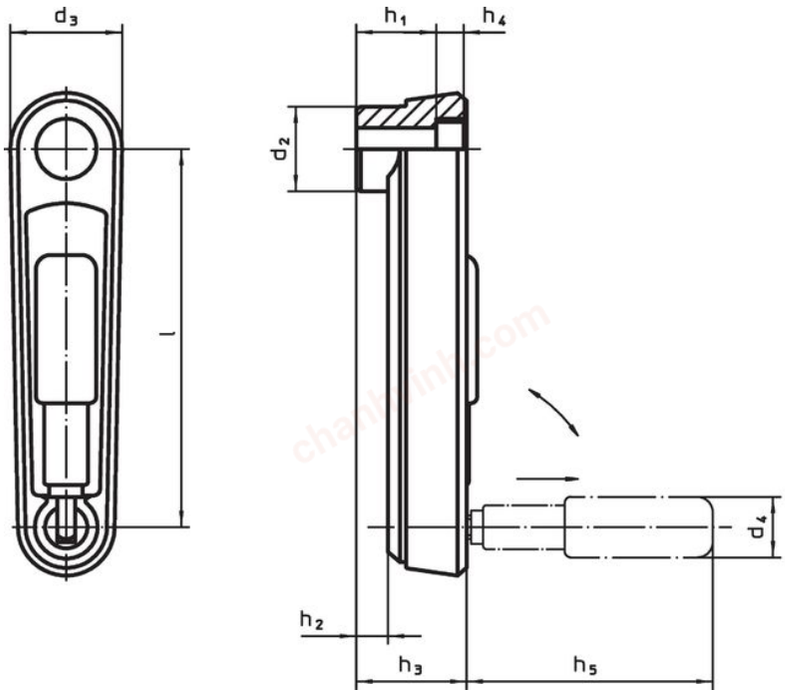

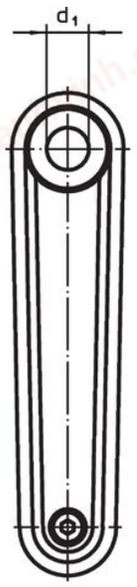

picture 1

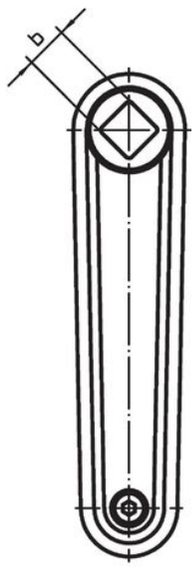

picture 2

Order information

l	d_1 H7	b H11	d_2	d_3	h_1	h_2 ~	h_3	h_4	h_5	d_4 Cylindrical handle Ø	[g]	Art. No.
						[mm]						
with smooth bore – picture 1, silver												
80	**10**	**–**	23.0	30	19.5	4.0	25.5	4.3	43.0	16	116	24331.0005
100	**12**	**–**	26.7	35	23.5	5.5	29.5	4.2	57.5	18	172	24331.0010
125	**14**	**–**	28.0	37	30.5	10.5	36.5	4.2	76.5	24	261	24331.0015
with smooth bore – picture 1, black												
80	**10**	**–**	23.0	30	19.5	4.0	25.5	4.3	43.0	16	112	24331.0105
100	**12**	**–**	26.7	35	23.5	5.5	29.5	4.2	57.5	18	164	24331.0110
125	**14**	**–**	28.0	37	30.5	10.5	36.5	4.2	76.5	24	259	24331.0115
with square shaft – picture 2, silver												
80	**–**	**10**	23.0	30	19.5	4.0	25.5	4.3	43.0	16	115	24331.0205
100	**–**	**12**	26.7	35	23.5	5.5	29.5	4.2	57.5	18	170	24331.0210
125	**–**	**14**	28.0	37	30.5	10.5	36.5	4.2	76.5	24	256	24331.0215

chanhvinh.com

Dimensions												Art. No.
l	d_1 H7	b H11	d_2	d_3	h_1	h_2 ~	h_3	h_4	h_5	d_4 Cylindrical handle Ø	[g]	
						[mm]						
with square shaft – picture 2, black												
80	–	**10**	23.0	30	19.5	4.0	25.5	4.3	43.0	16	110	24331.0305
100	–	**12**	26.7	35	23.5	5.5	29.5	4.2	57.5	18	166	24331.0310
125	–	**14**	28.0	37	30.5	10.5	36.5	4.2	76.5	24	257	24331.0315

Compliance

For detailed compliance information please select the desired article number.

chanhvinh.com