chanhvinh.com

Crank Handles • stainless steel precision casting
EH 24330.



Product Description

Flat side of the hub is machined.

Material

Axle part
- Stainless steel 1.4301

Handle body
- Stainless steel 1.4308

Cylindrical handle
- Thermosetting plastic PF 31, black

Drawing

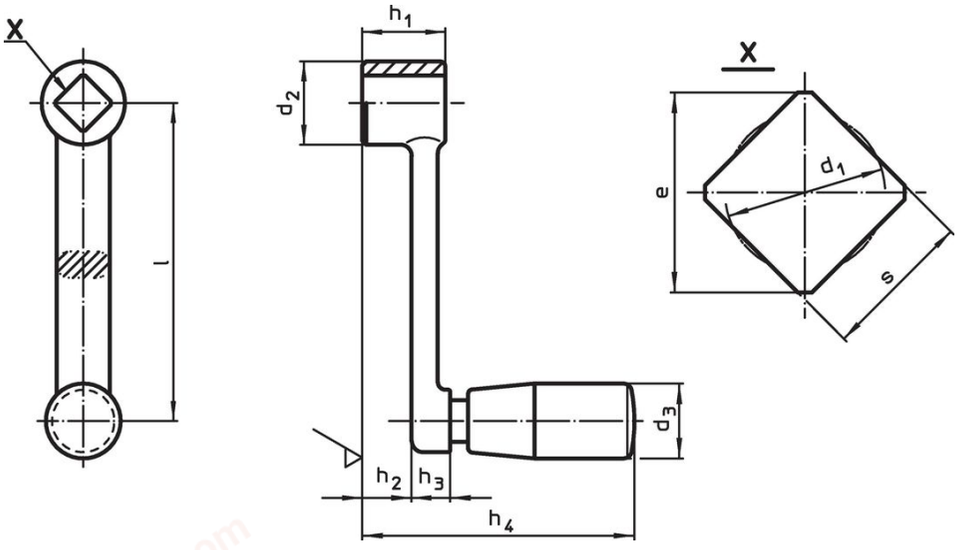

Order information

Dimensions									d_3 Cylindrical handle Ø EH 24530.		Art. No.
l	s H11	e min.	d_1 max.	d_2	h_1	h_2 ~	h_3	h_4 ~			
[mm]									[mm]	[g]	
80	**10**	13.1	10.5	22	22	15.4	6.6	64.5	18	124	24330.0520
100	**12**	16.1	12.6	26	26	17.7	8.3	78.5	21	191	24330.0530
125	**14**	18.1	14.7	28	28	18.8	9.2	95.5	23	320	24330.0540
160	**17**	22.2	17.9	32	32	22.6	9.4	99.5	23	370	24330.0550

chanhvinh.com

Application example

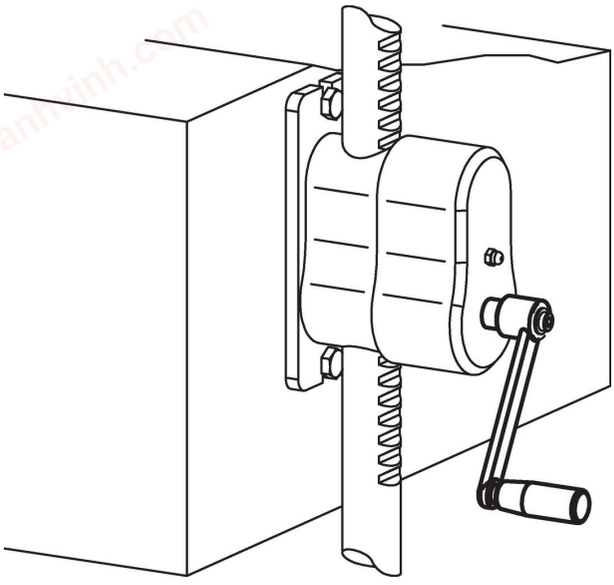

Compliance

RoHS-compliant
Compliant with Directive 2011/65/EU [RoHS].

Does not contain SVHC substances
No SVHC substances with more than 0.1% w/w contained - SVHC list [REACH] as of 04.02.2026.

SCIP-code
N/A

Does not contain Proposition 65 substances
No Proposition 65 substances included.
https://www.P65Warnings.ca.gov/

Free from Conflict Minerals
This product does not contain any substances designated as "conflict minerals" such as tantalum, tin, gold or tungsten from the Democratic Republic of Congo or adjacent countries.

POP-compliant
Contains no persistent organic pollutants – Stockholm Convention [POP] as of September 2025.

PFAS-compliant
Contains no per- and polyfluoroalkyl substances (PFAS).

TSCA-compliant
Agent concentration in this product does not exceed the specified threshold.