chanhvinh.com

Crank Handles

EH 24330.



Product Description

Material

Handle body
- Zinc die-cast, plastic coated, black, matt structure
- Aluminium, plastic coated, black, matt structure

Cylindrical handle
- Thermosetting plastic PF 31, black

More information

References

Alternative to crank handles DIN 469.

Drawing

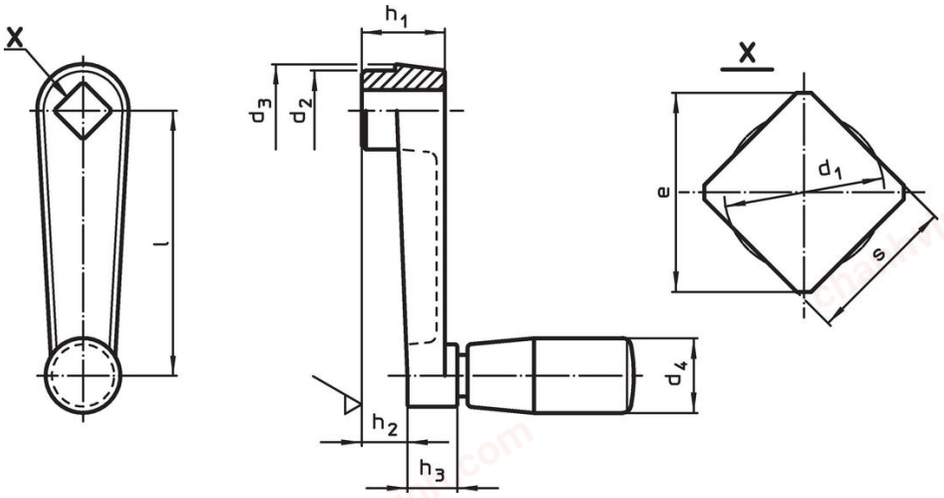

Order information

Dimensions									d_4 Cylindrical handle Ø EH 24530.	max.		Art. No.
l	s H11	e min.	d_1 max.	d_2	d_3	h_1	h_2 ~	h_3				
[mm]									[mm]	[°C]	[g]	
Zinc die-cast												
50	**8**	10.1	8.4	16	18	18	10	10	14	80	58	24330.0420
64	**10**	13.1	10.5	19	22	20	11	12	18	80	97	24330.0422
80	**10**	13.1	10.5	23	26	24	14	14	21	80	166	24330.0424
100	**12**	16.1	12.6	27	30	28	17	15	23	80	270	24330.0436
Aluminium Al												
80	**10**	13.1	10.5	23	26	24	14	14	21	80	97	24330.0410
100	**12**	16.1	12.6	27	30	28	17	15	23	80	161	24330.0412
125	**14**	18.1	14.7	32	35	34	22	18	26	80	251	24330.0414
160	**17**	22.2	17.9	35	39	38	26	18	26	80	280	24330.0416

chanhvinh.com

Application example

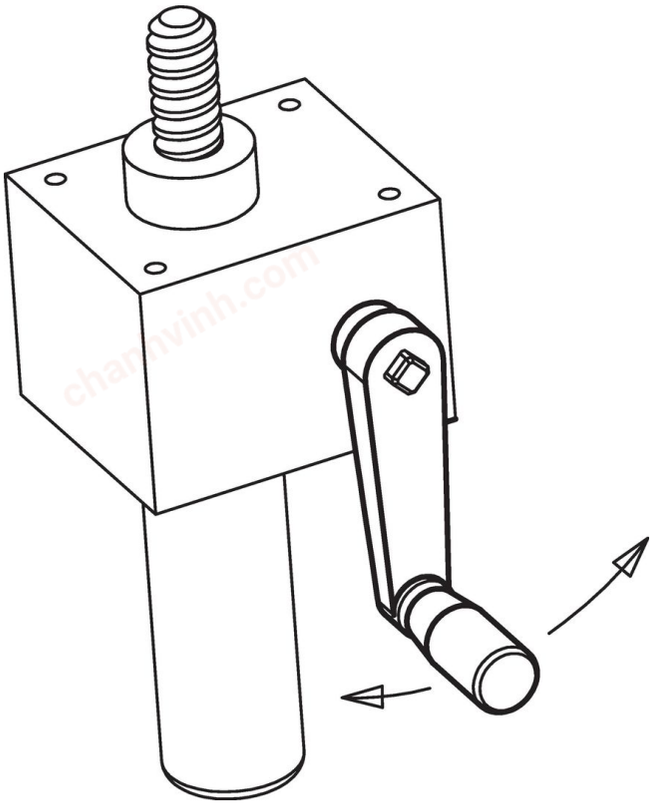

Compliance

For detailed compliance information please select the desired article number.