chanhvinh.com



# **Crank Handles** • DIN 469 straight with square end DIN 79
## EH 24330.



## Product Description

With these crank handles, the seam is ground and blasted. The hub is machined.

### Material

**Machine handle**
- Steel, turned, zinc-plated by galvanization, passivated

**Handle body**
- Cast iron (GTW), plastic coated, black
- Nodular cast iron, plastic coated, black

## Drawing

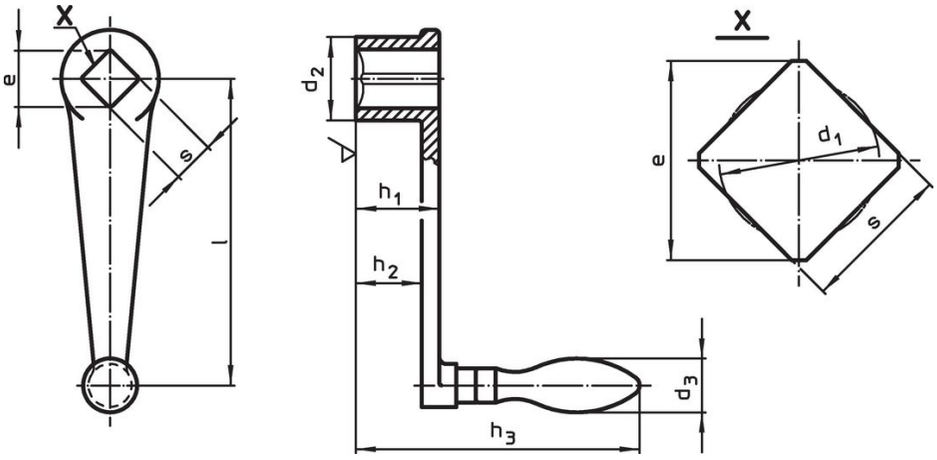


## Order information

| Dimensions | | | | | | | | $d_3$ | | Art. No. |
|---|---|---|---|---|---|---|---|---|---|---|
| l | s H11 | e min. | $d_1$ | $d_2$ | $h_1$ | $h_2$ ~ | $h_3$ | Machine handle Ø | | |
| [mm] | | | | | | | | [mm] | | |
| **with rotating machine handle (EH 24460., DIN 98), form D** | | | | | | | | | | |
| **63** | **10** | 13.1 | 10.5 | 20 | 20 | 15 | 79 | 16 | 118.0 g | 24330.0010[1)] |
| **80** | **10** | 13.1 | 10.5 | 24 | 24 | 18 | 97 | 18 | 211.0 g | 24330.0020 |
| **80** | **12** | 16.1 | 12.6 | 24 | 24 | 18 | 97 | 18 | 197.0 g | 24330.0021 |
| **100** | **12** | 16.1 | 12.6 | 28 | 28 | 21 | 100 | 20 | 296.0 g | 24330.0030 |
| **100** | **14** | 18.1 | 14.7 | 28 | 28 | 21 | 100 | 20 | 293.0 g | 24330.0031 |
| **125** | **14** | 18.1 | 14.7 | 34 | 34 | 26 | 122 | 22 | 468.0 g | 24330.0040 |
| **125** | **17** | 22.2 | 17.9 | 34 | 34 | 26 | 122 | 22 | 433.0 g | 24330.0041 |
| **160** | **17** | 22.2 | 17.9 | 38 | 38 | 29 | 126 | 25 | 667.0 g | 24330.0050 |
| **160** | **19** | 25.2 | 20.0 | 38 | 38 | 29 | 126 | 25 | 665.0 g | 24330.0051 |
| **200** | **19** | 25.2 | 20.0 | 44 | 44 | 34 | 160 | 28 | 1.1 kg | 24330.0060 |
| **200** | **22** | 28.2 | 23.1 | 44 | 44 | 34 | 160 | 28 | 992.0 g | 24330.0061 |
| **250** | **22** | 28.2 | 23.1 | 48 | 48 | 36 | 162 | 32 | 1.4 kg | 24330.0070 |
| **250** | **24** | 32.2 | 25.3 | 48 | 48 | 36 | 162 | 32 | 1.4 kg | 24330.0071 |
| **with fixed machine handle (EH 24450., DIN 39), form F** | | | | | | | | | | |
| **63** | **10** | 13.1 | 10.5 | 20 | 20 | 15 | 74 | 16 | 109.0 g | 24330.0110[1)] |
| **80** | **10** | 13.1 | 10.5 | 24 | 24 | 18 | 94 | 18 | 241.0 g | 24330.0120 |
| **80** | **12** | 16.1 | 12.6 | 24 | 24 | 18 | 94 | 18 | 186.0 g | 24330.0121 |
| **100** | **12** | 16.1 | 12.6 | 28 | 28 | 21 | 98 | 20 | 278.0 g | 24330.0130 |
| **100** | **14** | 18.1 | 14.7 | 28 | 28 | 21 | 98 | 20 | 259.0 g | 24330.0131 |
| **125** | **14** | 18.1 | 14.7 | 34 | 34 | 26 | 120 | 22 | 444.0 g | 24330.0140 |

[1)] Handle body made from cast iron (GTW)

chanhvinh.com



| Dimensions | | | | | | | | $d_3$ Machine handle Ø | | Art. No. |
|---|---|---|---|---|---|---|---|---|---|---|
| l | s H11 | e min. | $d_1$ | $d_2$ | $h_1$ | $h_2$ ~ | $h_3$ | | | |
| | | | [mm] | | | | | [mm] | | |
| **125** | **17** | 22.2 | 17.9 | 34 | 34 | 26 | 120 | 22 | 433.0 g | 24330.0141 |
| **160** | **17** | 22.2 | 17.9 | 38 | 38 | 29 | 122 | 25 | 786.0 g | 24330.0150 |
| **160** | **19** | 25.2 | 20.0 | 38 | 38 | 29 | 122 | 25 | 651.0 g | 24330.0151 |
| **200** | **19** | 25.2 | 20.0 | 44 | 44 | 34 | 154 | 28 | 962.0 g | 24330.0160 |
| **200** | **22** | 28.2 | 23.1 | 44 | 44 | 34 | 154 | 28 | 983.0 g | 24330.0161 |
| **250** | **22** | 28.2 | 23.1 | 48 | 48 | 36 | 157 | 32 | 1.4 kg | 24330.0170 |
| **250** | **24** | 32.2 | 25.3 | 48 | 48 | 36 | 157 | 32 | 1.7 kg | 24330.0171 |

[1)] Handle body made from cast iron (GTW)

## Compliance

For detailed compliance information please select the desired article number.