chanhvinh.com

Tubular Handles • front mounting

EH 24321.



Product Description

Tubular handles are used, for example, on machine doors.
These tubular handles made of aluminium are characterised by their ergonomic and robust construction and modern design. This version is equipped with angled handle legs (legs).

Material

Handle
- Aluminium, anodised
- Aluminium, plastic coated, similar to RAL 9005 black, matt structure

Handle shank
- Zinc die-cast, plastic coated, silver, similar to RAL 9006, matt structure
- Zinc die-cast, plastic coated, black, similar to RAL 9005, matt structure

Cap
- Plastic, light grey

Covering
- Plastic, light grey
- Plastic, black

Assembly

The handles can be mounted to the component from the front (operating side) using cylinder screws. The hole is closed with a plastic covering.

More information

Notes

Customized design on request.

Drawing

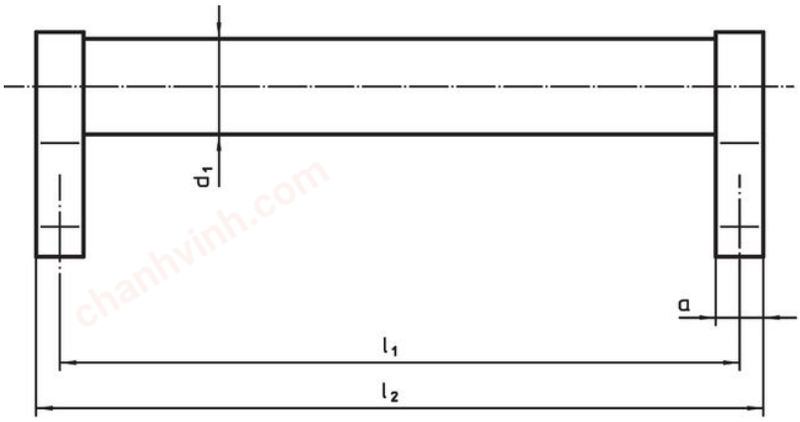

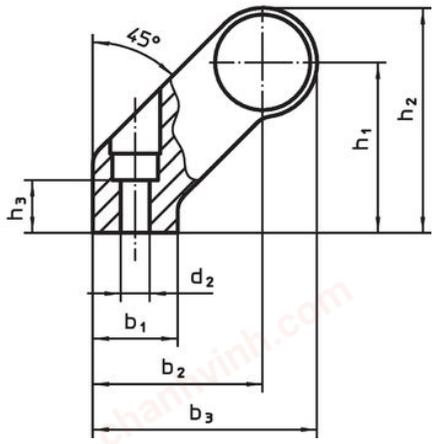

Order information

Dimensions												Art. No.
d_1	l_1 ±0.25	a	b_1	b_2	b_3	d_2	h_1	h_2	h_3 min.	l_2	[g]	
					[mm]							
silver												
28	**200**	14	25	50	66	6.5	50	66	17	214	488	24321.0100
28	**250**	14	25	50	66	6.5	50	66	17	264	437	24321.0105
28	**300**	14	25	50	66	6.5	50	66	17	314	448	24321.0110
28	**350**	14	25	50	66	6.5	50	66	17	364	493	24321.0115
28	**400**	14	25	50	66	6.5	50	66	17	414	520	24321.0120
28	**500**	14	25	50	66	6.5	50	66	17	514	500	24321.0125
28	**600**	14	25	50	66	6.5	50	66	17	614	631	24321.0130
black												
28	**200**	14	25	50	66	6.5	50	66	17	214	399	24321.0600
28	**250**	14	25	50	66	6.5	50	66	17	264	430	24321.0605
28	**300**	14	25	50	66	6.5	50	66	17	314	453	24321.0610

chanhvinh.com

Dimensions												Art. No.
d_1	l_1 ±0.25	a	b_1	b_2	b_3	d_2	h_1	h_2	h_3 min.	l_2	[g]	
					[mm]							
28	**350**	14	25	50	66	6.5	50	66	17	364	489	24321.0615
28	**400**	14	25	50	66	6.5	50	66	17	414	904	24321.0620
28	**500**	14	25	50	66	6.5	50	66	17	514	950	24321.0625
28	**600**	14	25	50	66	6.5	50	66	17	614	599	24321.0630

Compliance

For detailed compliance information please select the desired article number.