chanhvinh.com

U-Handles • plastic
EH 24320.



Product Description

U-handles are used, for example, on machine doors, furniture doors, cabinet doors, drawers and drawer units.
These U-handles made of glass fibre reinforced plastic are characterised by their ergonomic and stable construction and their simple and timeless design.

Material

Bushing
- Brass

Handle
- Thermoplastic PA, glass-fibre reinforced, black

Assembly

Installation from the rear.

Drawing

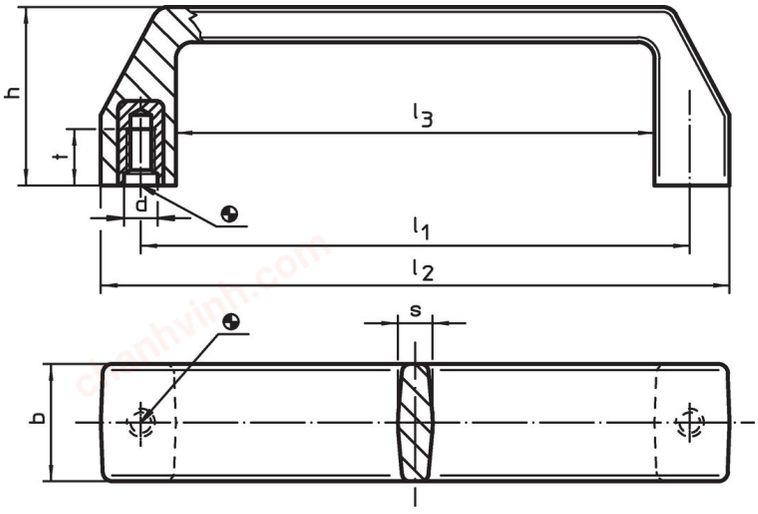

Order information

Dimensions										Art. No.
l_1 ±0.5	d	b	h	l_2	l_3	s	t	max.		
[mm]								[°C]	[g]	
93.5	**M6**	**21**	36	107	79	6.0	10	100	31	24320.0210
117.0	**M6**	**25**	38	134	102	7.5	12	100	54	24320.0220
117.0	**M8**	**25**	38	134	102	7.5	12	100	50	24320.0230
132.0	**M8**	**26**	45	150	116	8.0	13	100	59	24320.0240

Application example



chanhvinh.com

Compliance

For detailed compliance information please select the desired article number.

chanhvinh.com
chanhvinh.com
chanhvinh.com
chanhvinh.com
chanhvinh.com
chanhvinh.com