chanhvinh.com

U-Handles • plastic, front mounting
EH 24320.



Product Description

U-handles are used, for example, on machine doors, furniture doors, cabinet doors, drawers and drawer units.
These U-handles made of glass fibre reinforced plastic are characterised by their ergonomic and stable construction and their simple and timeless design.

Material

Handle
- Thermoplastic PA, glass-fibre reinforced, black

Assembly

Mounting is done from the operating side by means of a cylinder screw.

Drawing

For for cylinder head stud
ISO4762 – M6/M8/M10

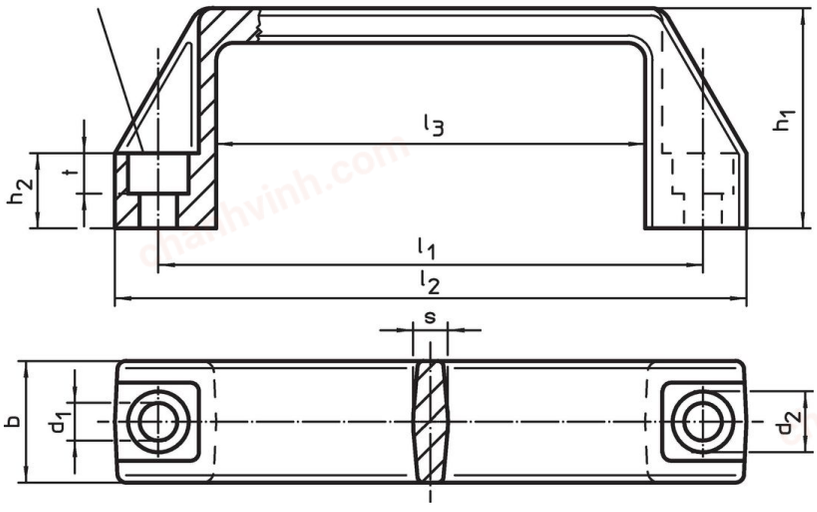

Order information

Dimensions										For cylinder screw	max.		Art. No.
l_1 ±0.5	d_1	b	l_2	d_2	h_1	h_2	l_3	s	t				
[mm]										[mm]	[°C]	[g]	
93.5	**6.5**	**21**	109	10.5	38	13	74	6.0	7.0	M 6	100	28	24320.0010
117.0	**8.5**	**26**	137	13.5	41	15	93	7.0	8.5	M 8	100	42	24320.0020
132.0	**8.5**	**27**	150	13.5	45	16	108	7.0	8.5	M 8	100	48	24320.0030
179.0	**8.5**	**28**	196	13.5	50	17	151	7.5	8.5	M 8	100	70	24320.0040
235.0	**10.5**	**30**	260	16.5	54	20	201	8.5	10.5	M10	100	118	24320.0050

Application example

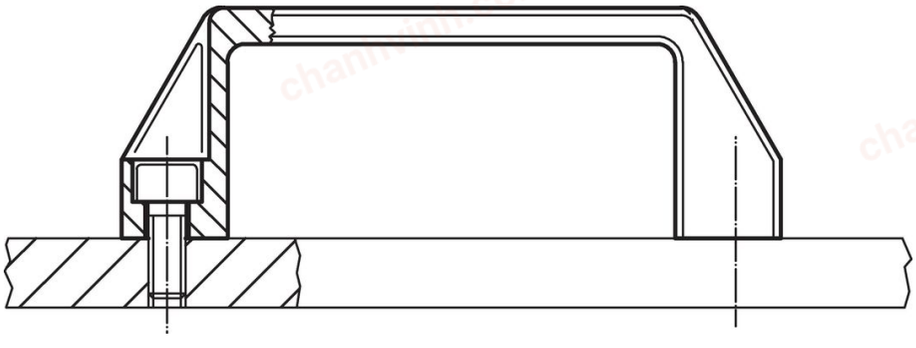

chanhvinh.com

Compliance

RoHS-compliant
Compliant with Directive 2011/65/EU [RoHS].

Does not contain SVHC substances
No SVHC substances with more than 0.1% w/w contained - SVHC list [REACH] as of 04.02.2026.

SCIP-code
N/A

Does not contain Proposition 65 substances
No Proposition 65 substances included.
https://www.P65Warnings.ca.gov/

Free from Conflict Minerals
This product does not contain any substances designated as "conflict minerals" such as tantalum, tin, gold or tungsten from the Democratic Republic of Congo or adjacent countries.

POP-compliant
Contains no persistent organic pollutants – Stockholm Convention [POP] as of September 2025.

PFAS-compliant
Contains no per- and polyfluoroalkyl substances (PFAS).

TSCA-compliant
Agent concentration in this product does not exceed the specified threshold.