chanhvinh.com

U-Handles • front mounting
EH 24300.



Product Description

U-handles are used, for example, on machine doors, furniture doors, cabinet doors, drawers and drawer units.
These U-handles are characterised by their ergonomic profile design with very high stability and their simple and timeless design.

Material

Handle
- Aluminium, drawn, bright, vibratory grinded
- Aluminium, plastic coated, similar to RAL 9005, black
- stainless steel, dull blasted

Assembly

Mounting is done from the operating side by means of a cylinder screw.

Drawing

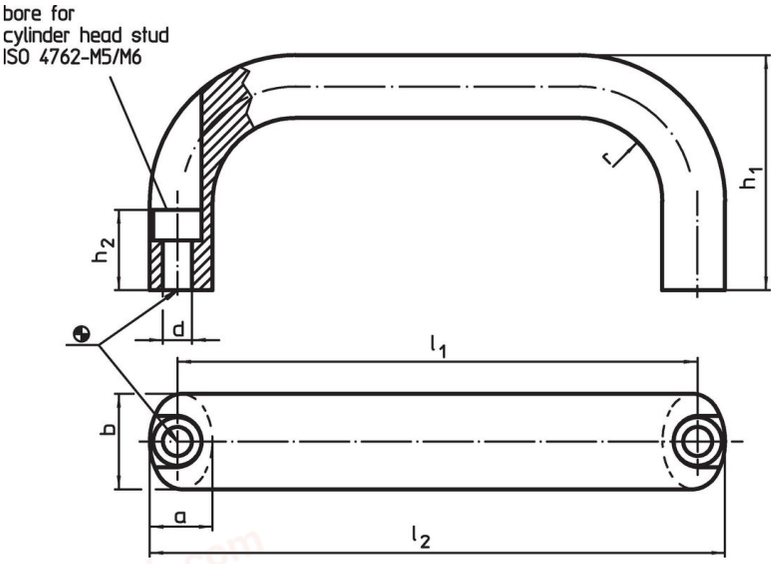

Order information

b	l_1 ±0.25	l_2	a	d	h_1	h_2	r	For cylinder screw		Art. No.
[mm]								[mm]	[g]	
Aluminium, drawn, bright, vibratory grinded										
20	**100**	112	13	5.4	49	19	13	M5	80	24300.0101
20	**112**	124	13	5.4	49	19	13	M5	82	24300.0111
20	**117**	129	13	5.4	49	19	13	M5	84	24300.0113
20	**120**	132	13	5.4	51	19	13	M5	90	24300.0115
20	**128**	140	13	5.4	51	19	13	M5	100	24300.0121
20	**160**	172	13	5.4	51	19	13	M5	100	24300.0131
26	**116**	130	17	6.4	55	17	17	M6	146	24300.0141
26	**120**	134	17	6.4	55	17	17	M6	152	24300.0143
26	**132**	146	17	6.4	55	17	17	M6	161	24300.0151
26	**164**	178	17	6.4	57	17	17	M6	196	24300.0161
26	**179**	193	17	6.4	57	17	17	M6	215	24300.0166
26	**196**	210	17	6.4	57	17	17	M6	229	24300.0171
Aluminium, plastic coated, similar to RAL 9005, black										
20	**100**	112	13	5.4	49	19	13	M5	80	24300.0301
20	**112**	124	13	5.4	49	19	13	M5	90	24300.0311
20	**117**	129	13	5.4	49	19	13	M5	84	24300.0313
20	**120**	132	13	5.4	49	19	13	M5	90	24300.0315
20	**128**	140	13	5.4	51	19	13	M5	97	24300.0321
20	**160**	172	13	5.4	51	19	13	M5	120	24300.0331

chanhvinh.com

Dimensions								For cylinder screw		Art. No.
b	l_1 ±0.25	l_2	a	d	h_1	h_2	r			
[mm]								[mm]	[g]	
26	**116**	130	17	6.4	55	17	17	M6	132	24300.0341
26	**120**	134	17	6.4	55	17	17	M6	152	24300.0343
26	**132**	146	17	6.4	55	17	17	M6	166	24300.0351
26	**164**	178	17	6.4	57	17	17	M6	206	24300.0361
26	**179**	193	17	6.4	57	17	17	M6	213	24300.0366
26	**196**	210	17	6.4	57	17	17	M6	232	24300.0371
stainless steel, dull blasted										
20	**112**	124	13	5.4	49	19	13	M5	258	24300.0511
20	**128**	140	13	5.4	51	19	13	M5	293	24300.0521
20	**160**	172	13	5.4	51	19	13	M5	345	24300.0531
26	**128**	140	17	6.4	57	17	19	M6	455	24300.0655
26	**160**	172	17	6.4	57	17	19	M6	542	24300.0665
26	**200**	216	17	6.4	57	17	19	M6	651	24300.0675

Application example

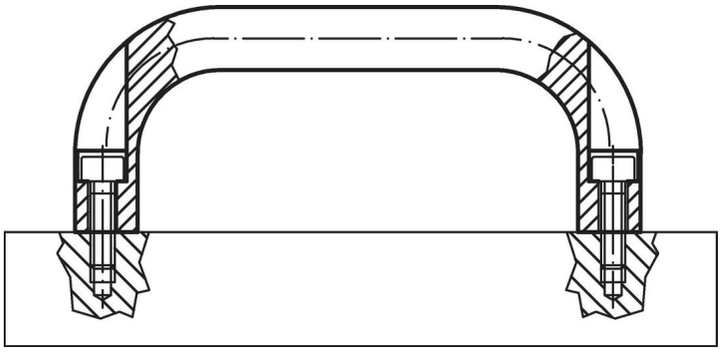

Compliance

For detailed compliance information please select the desired article number.