chanhvinh.com

U-Handles

EH 24300.



Product Description

U-handles are used, for example, on machine doors, furniture doors, cabinet doors, drawers and drawer units.
These U-handles are characterised by their ergonomic profile design with very high stability and their simple and timeless design.

Material

Handle
- Aluminium, drawn, bright, vibratory grinded
- Aluminium, plastic coated, similar to RAL 9005, black
- Stainless steel 1.4301, dull blasted
- stainless steel, slide polished, shiny metallic finish

Assembly

Installation from the rear.

Drawing

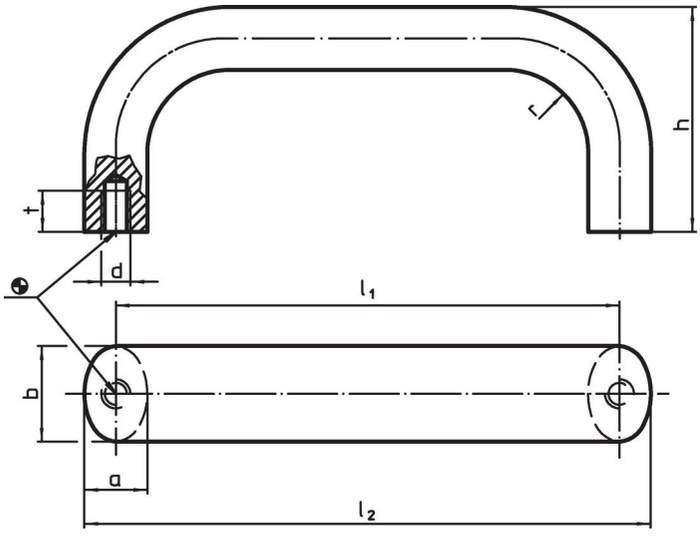

Order information

b	l_1 ±0.25	l_2	a	d	h	r	t		Art. No.
			[mm]						
Aluminium, bright, Aluminium, drawn, bright, vibratory grinded									
20	**100**	113	13	M6	49	13	10	89.0 g	24300.0100
20	**112**	125	13	M6	49	13	10	97.0 g	24300.0110
20	**117**	130	13	M6	49	13	10	100.0 g	24300.0112
20	**120**	133	13	M6	49	13	10	101.0 g	24300.0114
20	**128**	141	13	M6	51	13	10	107.0 g	24300.0120
20	**160**	173	13	M6	51	13	10	122.0 g	24300.0130
20	**180**	193	13	M6	51	13	10	128.0 g	24300.0132
20	**200**	213	13	M6	51	13	10	150.0 g	24300.0134
20	**235**	248	13	M6	51	13	10	180.0 g	24300.0136
26	**112**	129	17	M8	55	17	12	167.0 g	24300.0140
26	**117**	134	17	M8	55	17	12	166.0 g	24300.0142
26	**120**	137	17	M8	55	17	12	200.0 g	24300.0144
26	**125**	142	17	M8	55	17	12	176.0 g	24300.0146
26	**128**	154	17	M8	55	17	12	180.0 g	24300.0150
26	**160**	177	17	M8	57	17	12	217.0 g	24300.0160
26	**179**	196	17	M8	57	17	12	234.0 g	24300.0162

chanhvinh.com

Dimensions [mm]									Art. No.
b	l_1 ±0.25	l_2	a	d	h	r	t		
26	**192**	209	17	M8	57	17	12	240.0 g	24300.0170
26	**300**	317	17	M8	57	17	12	344.0 g	24300.0180
26	**400**	417	17	M8	57	17	12	436.0 g	24300.0190
26	**500**	517	17	M8	57	17	12	531.0 g	24300.0200
Aluminium, black, Aluminium, plastic coated, similar to RAL 9005, black									
20	**100**	113	13	M6	49	13	10	92.0 g	24300.0300
20	**112**	125	13	M6	49	13	10	98.0 g	24300.0310
20	**117**	130	13	M6	49	13	10	100.0 g	24300.0312
20	**120**	133	13	M6	49	13	10	104.0 g	24300.0314
20	**128**	141	13	M6	51	13	10	110.0 g	24300.0320
20	**160**	173	13	M6	51	13	10	126.0 g	24300.0330
20	**180**	193	13	M6	51	13	10	128.0 g	24300.0332
20	**200**	213	13	M6	51	13	10	150.0 g	24300.0334
20	**235**	248	13	M6	51	13	10	180.0 g	24300.0336
26	**112**	129	17	M8	55	17	12	167.0 g	24300.0340
26	**117**	134	17	M8	55	17	12	166.0 g	24300.0342
26	**120**	137	17	M8	55	17	12	160.0 g	24300.0344
26	**125**	142	17	M8	55	17	12	178.0 g	24300.0346
26	**128**	145	17	M8	55	17	12	181.0 g	24300.0350
26	**160**	177	17	M8	57	17	12	217.0 g	24300.0360
26	**179**	196	17	M8	57	17	12	234.0 g	24300.0362
26	**192**	209	17	M8	57	17	12	250.0 g	24300.0370
26	**300**	317	17	M8	57	17	12	347.0 g	24300.0380
26	**400**	417	17	M8	57	17	12	472.0 g	24300.0390
26	**500**	517	17	M8	57	17	12	538.0 g	24300.0400
stainless steel, dull blasted, Stainless steel 1.4301									
20	**112**	125	13	M6	49	13	10	279.0 g	24300.0510
20	**128**	141	13	M6	51	13	10	300.0 g	24300.0520
20	**160**	173	13	M6	51	13	10	366.0 g	24300.0530
20	**200**	213	13	M6	51	13	10	440.0 g	24300.0540
20	**250**	263	13	M6	51	13	10	517.0 g	24300.0550
20	**300**	313	13	M6	51	13	10	597.0 g	24300.0560
20	**400**	413	13	M6	51	13	10	737.0 g	24300.0580
26	**128**	145	17	M8	57	19	12	517.0 g	24300.0651
26	**160**	177	17	M8	57	19	12	606.0 g	24300.0661
26	**200**	217	17	M8	57	19	12	708.0 g	24300.0671
26	**300**	317	17	M8	57	19	12	986.0 g	24300.0680
26	**400**	417	17	M8	57	19	12	1.3 kg	24300.0690
26	**500**	517	17	M8	57	19	12	1.5 kg	24300.0700
stainless steel, slide polished, shiny metallic finish, stainless steel, slide polished, shiny metallic finish									
20	**112**	125	13	M6	49	13	10	274.0 g	24300.0610
20	**128**	141	13	M6	51	13	10	309.0 g	24300.0620
20	**160**	173	13	M6	51	13	10	362.0 g	24300.0630
20	**200**	213	13	M6	51	13	10	420.0 g	24300.0640
26	**128**	145	17	M8	57	19	12	518.0 g	24300.0650
26	**160**	177	17	M8	57	19	12	603.0 g	24300.0660
26	**200**	217	17	M8	57	19	12	711.0 g	24300.0670

Application example

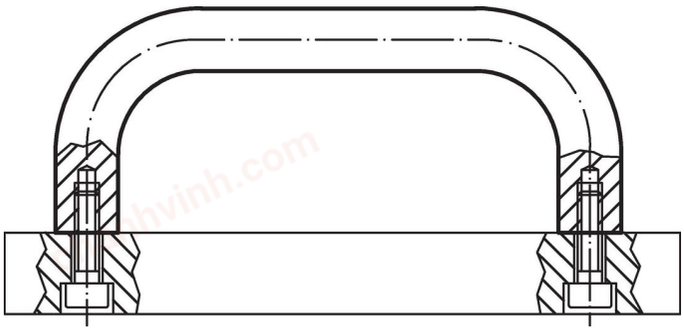

chanhvinh.com

Compliance

For detailed compliance information please select the desired article number.

chanhvinh.com