chanhvinh.com

Retaining Latches • wing grip, one-sided
EH 24101.



Product Description

To be used for door locking, drawers and as handling aid etc.
The retaining catch is indexing 4 x 90°.

Material

Flange
- Zinc die-cast, plastic coated, black

Lever
- Zinc die-cast, plastic coated, silver, similar to RAL 9006, matt structure
- Zinc die-cast, plastic coated, black, similar to RAL 9005, matt structure

Inner parts
- Zinc die-cast
- Steel
- plastic

Drawing

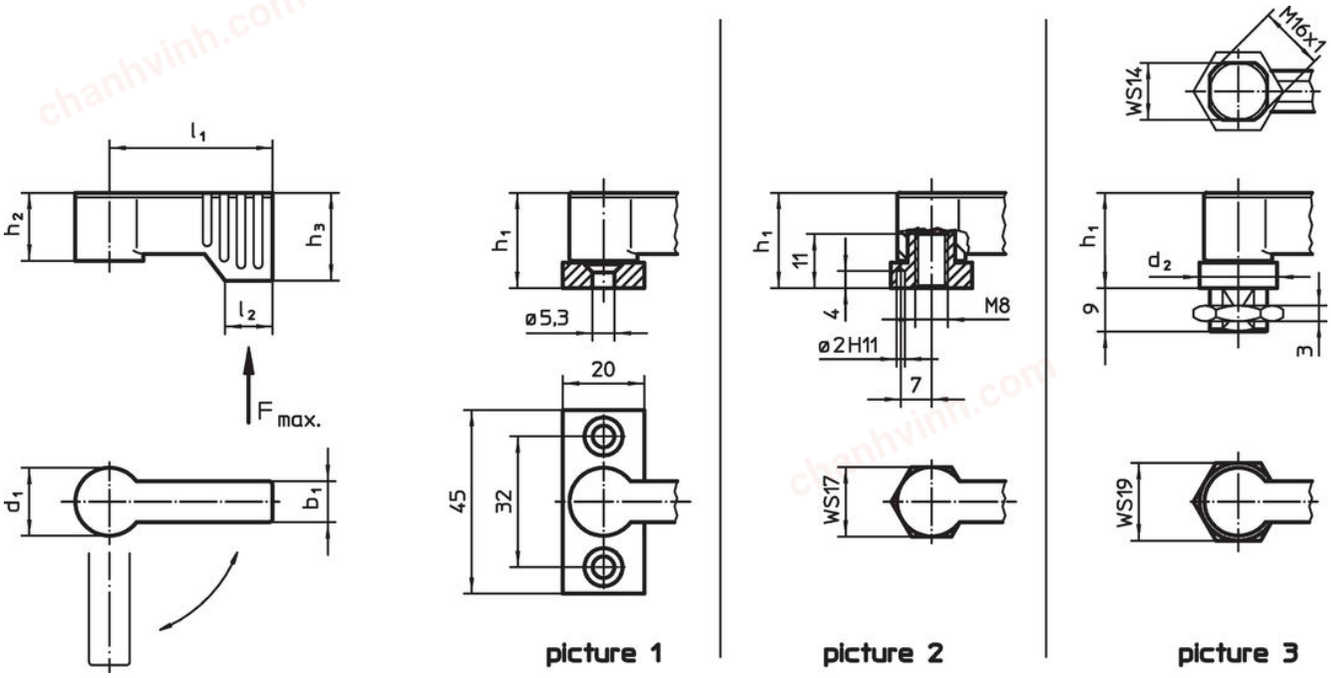

chanhvinh.com

Order information

Dimensions								Load capacity		Art. No.
d_1	l_1	b_1	d_2	h_1 ~	h_2 ~	h_3 min.	l_2	F max.		
[mm]								[N]	[g]	
with mounting flange – picture 1, silver										
17	**40**	10	–	22	16.5	21.5	11	450	75	24101.0201
17	**55**	10	–	22	16.5	21.5	11	450	83	24101.0204
with mounting flange – picture 1, black										
17	**40**	10	–	22	16.5	21.5	11	450	75	24101.0202
17	**55**	10	–	22	16.5	21.5	11	450	82	24101.0203
with female thread – picture 2, silver										
17	**40**	10	–	22	16.5	21.5	11	450	57	24101.0231
17	**55**	10	–	22	16.5	21.5	11	450	65	24101.0234
with female thread – picture 2, black										
17	**40**	10	–	22	16.5	21.5	11	450	57	24101.0232
17	**55**	10	–	22	16.5	21.5	11	450	65	24101.0233
with male thread – picture 3, silver										
17	**40**	10	19	22	16.5	21.5	11	450	69	24101.0261
17	**55**	10	19	22	16.5	21.5	11	450	76	24101.0264
with male thread – picture 3, black										
17	**40**	10	19	22	16.5	21.5	11	450	69	24101.0262
17	**55**	10	19	22	16.5	21.5	11	450	74	24101.0263

Application example

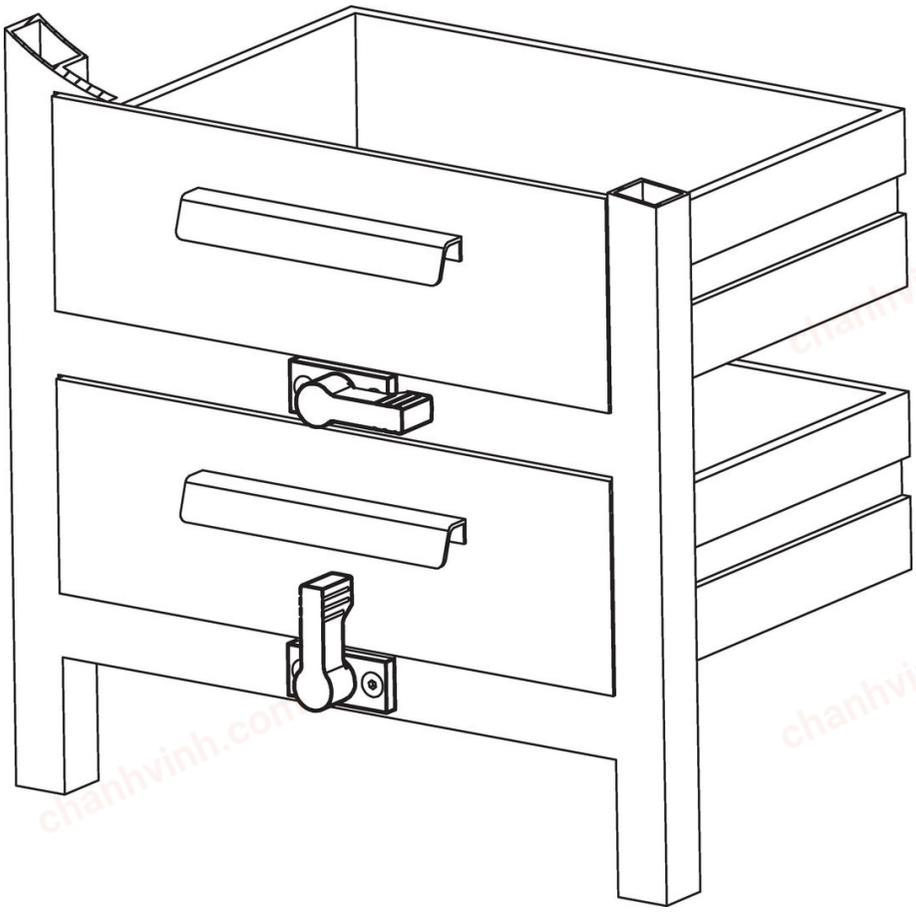

chanhvinh.com

Compliance

RoHS-compliant
Compliant with Directive 2011/65/EU [RoHS].

Does not contain SVHC substances
No SVHC substances with more than 0.1% w/w contained - SVHC list [REACH] as of 04.02.2026.

SCIP-code
N/A

Does not contain Proposition 65 substances
No Proposition 65 substances included.
https://www.P65Warnings.ca.gov/

Free from Conflict Minerals
This product does not contain any substances designated as "conflict minerals" such as tantalum, tin, gold or tungsten from the Democratic Republic of Congo or adjacent countries.

POP-compliant
Contains no persistent organic pollutants – Stockholm Convention [POP] as of September 2025.

PFAS-compliant
Contains no per- and polyfluoroalkyl substances (PFAS).

TSCA-compliant
Agent concentration in this product does not exceed the specified threshold.