chanhvinh.com

Retaining Latches • double-sided
EH 24100.



Product Description

To be used for door locking, drawers and as handling aid etc.
The retaining catch is indexing 4 x 90°.

Material

Lever
- Zinc die-cast, silver, similar to RAL 9006
- Zinc die-cast, black, similar to RAL 9005

Inner parts
- Dry powdered metal

Screw
- Stainless steel A2 (ISO 10642)

Drawing

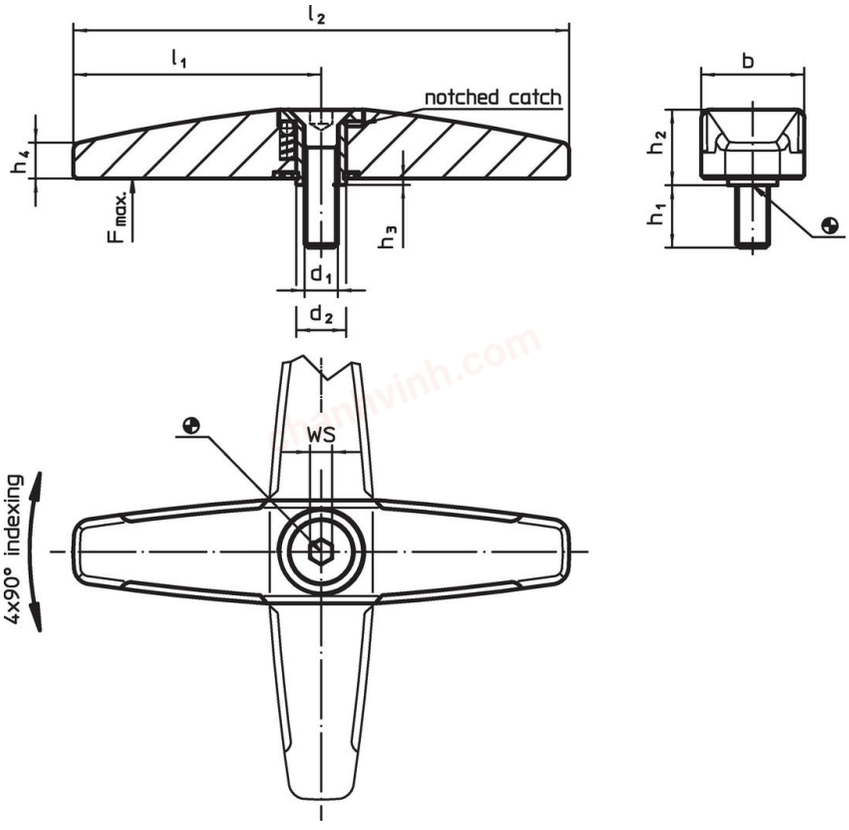

Order information

d1	d2	l1	l2	b	h1	h2	h3	h4	WS	Load capacity max.		Art. No.
				Dimensions [mm]					[mm]	[N]	[g]	
silver												
M6	9	45	90	19.0	12	13.3	0.8	6.5	4	500	94	24100.0601
M8	14	65	130	25.2	14	15.8	0.8	9.0	5	1000	223	24100.0651
black												
M6	9	45	90	19.0	12	13.3	0.8	6.5	4	500	94	24100.0602
M8	14	65	130	25.2	14	15.8	0.8	9.0	5	1000	225	24100.0652

chanhvinh.com

Application example

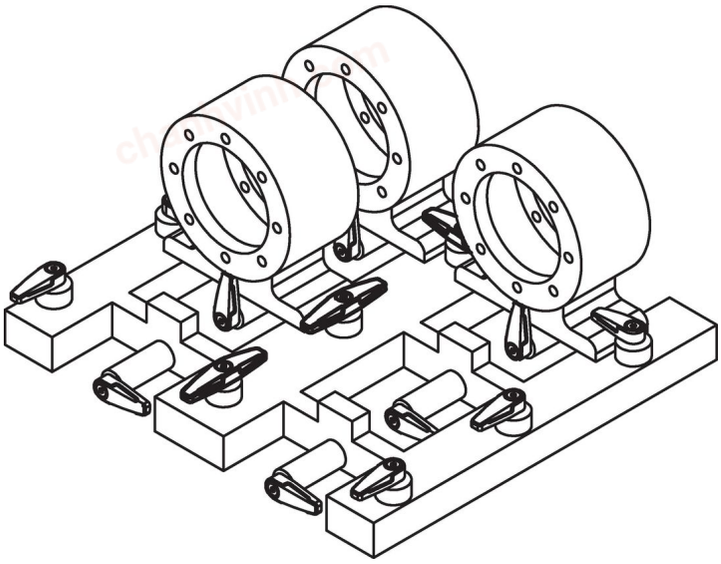

Compliance

RoHS-compliant
Compliant with Directive 2011/65/EU [RoHS].

Does not contain SVHC substances
No SVHC substances with more than 0.1% w/w contained - SVHC list [REACH] as of 04.02.2026.

SCIP-code
N/A

Contains Proposition 65 substances

Nickel can cause cancer from exposure.
https://www.P65Warnings.ca.gov/

Free from Conflict Minerals
This product does not contain any substances designated as "conflict minerals" such as tantalum, tin, gold or tungsten from the Democratic Republic of Congo or adjacent countries.

POP-compliant
Contains no persistent organic pollutants – Stockholm Convention [POP] as of September 2025.

PFAS-compliant
Contains no per- and polyfluoroalkyl substances (PFAS).

TSCA-compliant
Agent concentration in this product does not exceed the specified threshold.