chanhvinh.com

Base Elements • swivelling
EH 23700.



Product Description

Material

Body
- Steel, blackened

Wearing parts
- Heat-treated steel

Pull-rod
- Special steel

Drawing

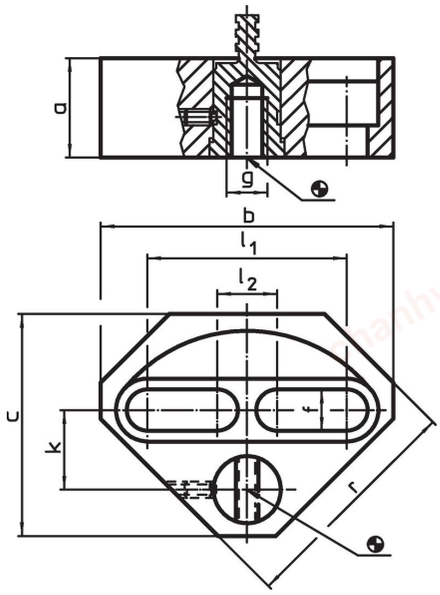

Order information

Dimensions [mm]										Art. No.
a	b	c	f	g	k	l_1	l_2	r		
29.7	**90**	**70**	12.5	M12	24	57	25	73	758.0 g	23700.0412
39.7	**110**	**86**	17.0	M16	30	71	31	90	1.5 kg	23700.0416

chanhvinh.com

Application example

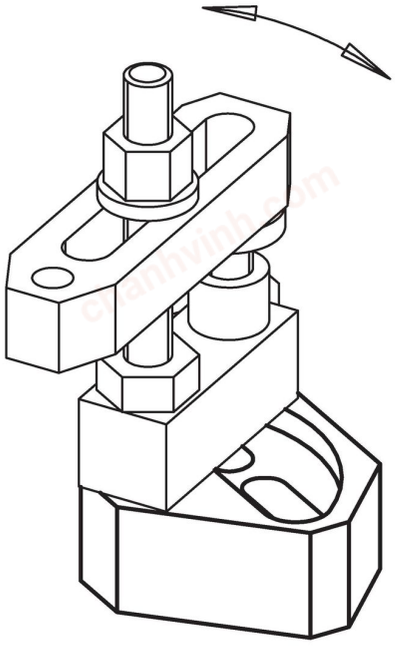

Compliance

RoHS-compliant
Compliant with Directive 2011/65/EU [RoHS].

Does not contain SVHC substances
No SVHC substances with more than 0.1% w/w contained - SVHC list [REACH] as of 04.02.2026.

SCIP-code
N/A

Does not contain Proposition 65 substances
No Proposition 65 substances included.
https://www.P65Warnings.ca.gov/

Free from Conflict Minerals
This product does not contain any substances designated as "conflict minerals" such as tantalum, tin, gold or tungsten from the Democratic Republic of Congo or adjacent countries.

POP-compliant
Contains no persistent organic pollutants – Stockholm Convention [POP] as of September 2025.

PFAS-compliant
Contains no per- and polyfluoroalkyl substances (PFAS).

TSCA-compliant
Agent concentration in this product does not exceed the specified threshold.