chanhvinh.com

Height Adapters • for compact clamp
EH 23690.



Product Description

The height adapter for compact clamps allows a clamping height increase and has the following characteristics:
- Continuous covering of clamping height
- T-slot in the height adapter allows exact positioning by moving the compact clamp at specified grid spacings
- Height can be expanded user-defined

Material

- Heat-treated steel, black coated

Drawing

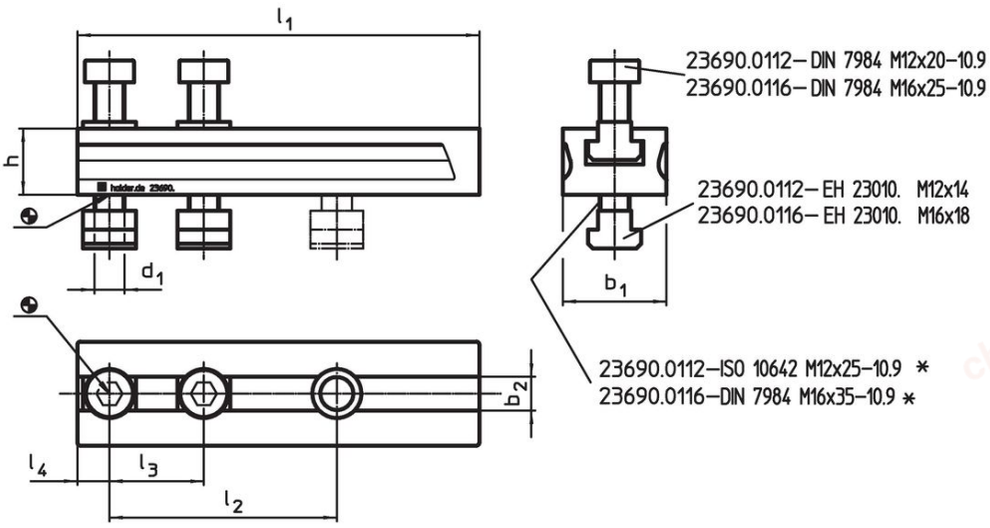

* When using more height adapters the screws ISO 10642 or DIN 7984 have to be replaced by screws extended by the dimension h.

Order information

Dimensions [mm]									Art. No.
d_1	l_1	l_2 +1	l_3	l_4	h	b_1	b_2 H12		
M12	134	70	50	13	20	45	14	874.0 g	23690.0112
M16	213	120	50	17	35	55	18	2.5 kg	23690.0116

Application example

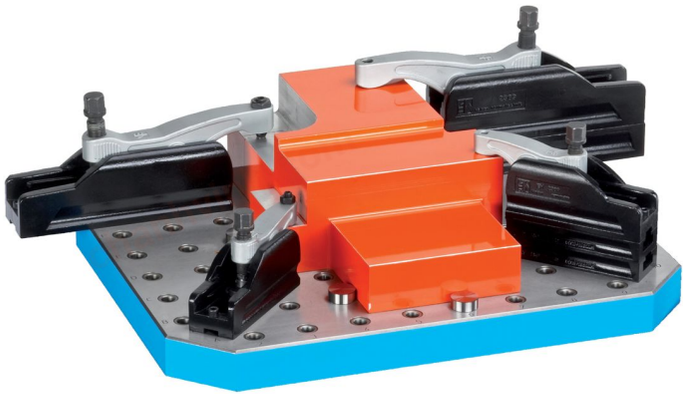

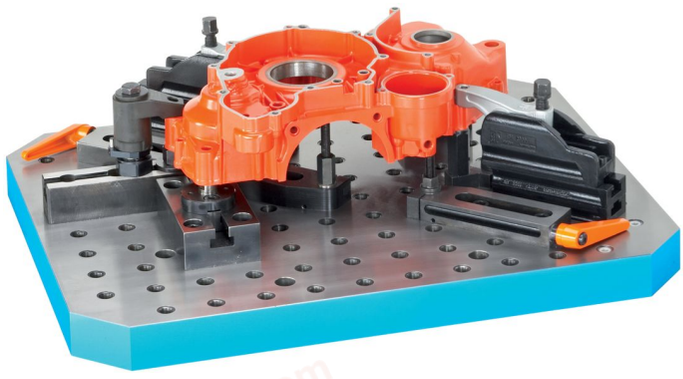

chanhvinh.com

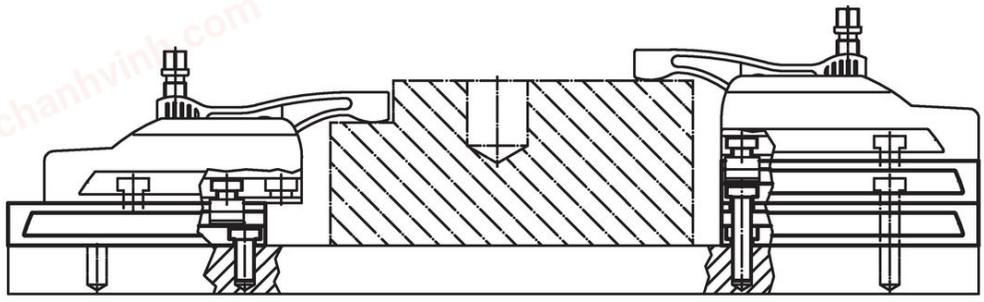

Compliance

RoHS-compliant
Compliant with Directive 2011/65/EU [RoHS].

Does not contain SVHC substances
No SVHC substances with more than 0.1% w/w contained - SVHC list [REACH] as of 04.02.2026.

SCIP-code
N/A

Contains Proposition 65 substances
Nickel can cause cancer from exposure.
https://www.P65Warnings.ca.gov/

Free from Conflict Minerals
This product does not contain any substances designated as "conflict minerals" such as tantalum, tin, gold or tungsten from the Democratic Republic of Congo or adjacent countries.

POP-compliant
Contains no persistent organic pollutants – Stockholm Convention [POP] as of September 2025.

PFAS-compliant
Contains no per- and polyfluoroalkyl substances (PFAS).

TSCA-compliant
Agent concentration in this product does not exceed the specified threshold.