chanhvinh.com

Screw Jacks

EH 23470.



Product Description

Trapezoidal self-locking thread, spindle with final safety device. The holders, which can be secured by means of the T-slots, make it possible to tighten the jacks so that they will not slip out of position when a workpiece is changed. They also allow to fit screw jacks to vertical clamping surfaces. Screw jacks are frequently used for supporting workpieces. Use of the self-aligning cap ensures a correctly aligned bearing surface. Using the centering plate as an intermediate element, it is possible to fit a number of screw jacks sizes 52, 70 and 100 together one above the other.

Material

Caps
- Steel, case-hardened, blackened

Screw Jacks
- Steel 1.0503 varnished

Drawing

screw jack

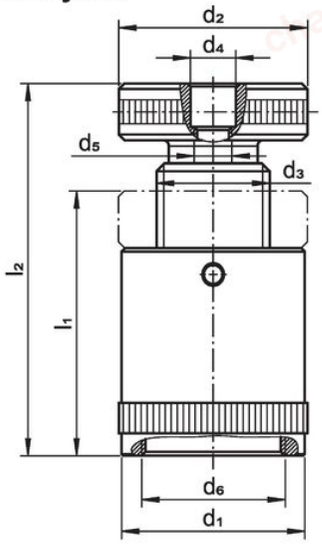

self-aligning cap

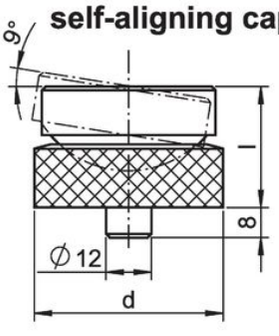

spherical cap

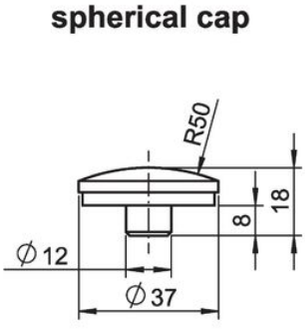

V-cap

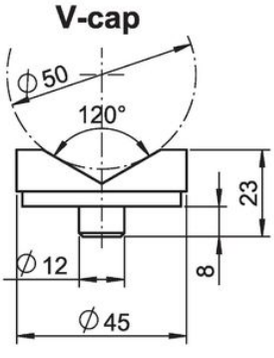

centering plate

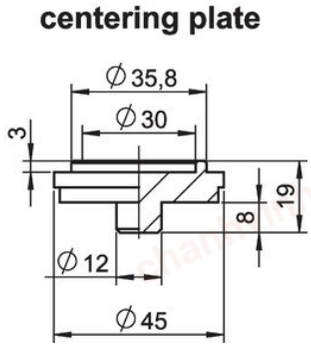

chanhvinh.com

Order information

l_2 Clamping height max. [mm]	Dimensions l_1 min. [mm]	d_1 [mm]	d_2 [mm]	d_3	d_4 [mm]	d_5 [mm]	d_6 [mm]	Load capacity [kN]		Art. No.
screw jack										
50	38	31	31	Tr 20 x 4	12	M10	–	15	191.0 g	23470.0005
52	42	50	50	Tr 30 x 4	12	M10	M38 x 2	60	539.0 g	23470.0006
70	50	50	50	Tr 30 x 4	12	M10	M38 x 2	60	645.0 g	23470.0007
100	70	50	50	Tr 30 x 4	12	M10	M38 x 2	60	900.0 g	23470.0010
140	100	70	70	Tr 40 x 7	12	M10	–	100	2.6 kg	23470.0014
210	140	80	70	Tr 50 x 8	12	M10	–	170	4.3 kg	23470.0021
300	190	100	80	Tr 65 x 10	12	M10	–	350	9.7 kg	23470.0030

Accessories

	Dimensions d [mm]	l [mm]	For screw jacks [mm]	[g]	Art. No.
self-aligning cap					
	50	32	**52/ 70/100**	401	23470.0350
	65	35	**140/210**	716	23470.0365
spherical cap					
	–	–	**52/ 70/100/140/210/300**	75	23470.0171
V-cap					
	–	–	**52/ 70/100/140/210/300**	138	23470.0172
centering plate					
	–	–	**52/ 70/100**	107	23470.0170

Compliance

For detailed compliance information please select the desired article number.