chanhvinh.com

Eccentric Clamping Modules • with shaft location
EH 23410.



Product Description

The clamping effect remains unchanged and is self-locking in any angle position.

Material

- Sintered steel, case-hardened

More information

References

Possible applications in combination with e.g. gear lever handles EH 24350.

Further products

- Gear Lever Handles

Drawing

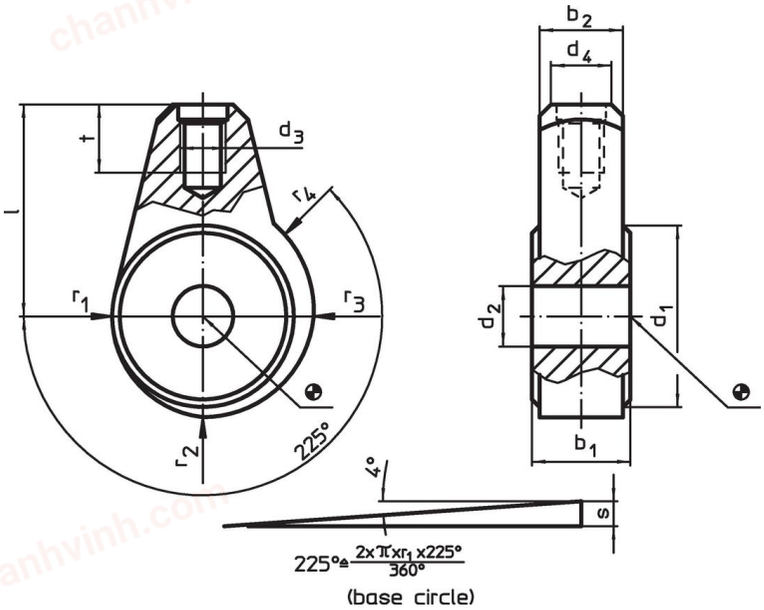

Order information

Dimensions												d_4 Gear lever handle Ø EH 24350.		Art. No.
d_1	d_2 H9	b_1 -0.05 -0.15	b_2	d_3	l	r_1	r_2	r_3	r_4	s	t			
[mm]												[mm]	[g]	
24	**8**	13	11	M 6	28	12.0	13.32	14.64	15.30	3.3	9	8	50	23410.0210
30	**10**	15	13	M 8	32	15.0	16.65	18.30	19.12	4.1	12	10	100	23410.0220
35	**12**	17	15	M10	36	17.5	19.42	21.34	22.31	4.8	15	12	150	23410.0230

chanhvinh.com

Application example

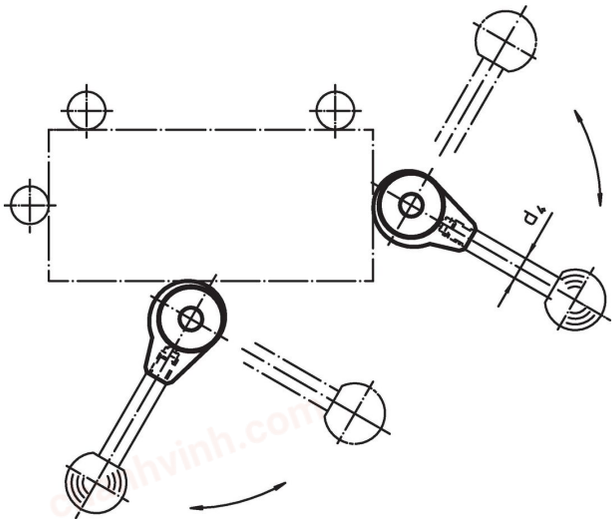

Compliance

RoHS-compliant
Compliant with Directive 2011/65/EU [RoHS].

Does not contain SVHC substances
No SVHC substances with more than 0.1% w/w contained - SVHC list [REACH] as of 04.02.2026.

SCIP-code
N/A

Does not contain Proposition 65 substances
No Proposition 65 substances included.
https://www.P65Warnings.ca.gov/

Free from Conflict Minerals
This product does not contain any substances designated as "conflict minerals" such as tantalum, tin, gold or tungsten from the Democratic Republic of Congo or adjacent countries.

POP-compliant
Contains no persistent organic pollutants – Stockholm Convention [POP] as of September 2025.

PFAS-compliant
Contains no per- and polyfluoroalkyl substances (PFAS).

TSCA-compliant
Agent concentration in this product does not exceed the specified threshold.