chanhvinh.com

Fulcrum Pins

EH 23400.



Product Description

Material

Fulcrum Pin
- Stainless steel 1.4021, heat-treated

Safety ring
- Stainless steel 1.4310

More information

References

Suitable for eccentric levers EH 23390. and similar applications.

Drawing

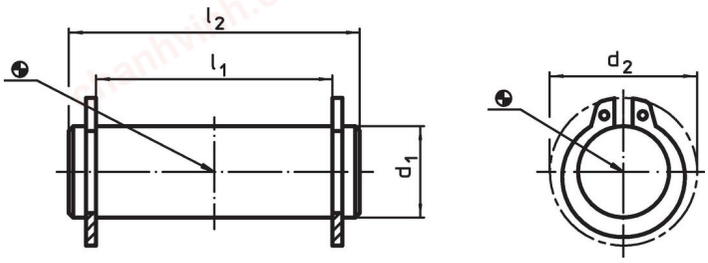

Order information

Dimensions					Art. No.
d_1 f8	l_1 -0.5	d_2	l_2		
[mm]				[g]	
8	**14**	14.7	18	8.9	23400.0082
8	**21**	14.7	27	12.0	23400.0085
10	**18**	17.0	24	19.0	23400.0102
10	**29**	17.0	35	21.0	23400.0105
12	**21**	19.0	27	26.0	23400.0122
12	**31**	19.0	37	35.0	23400.0125

chanhvinh.com

Application example

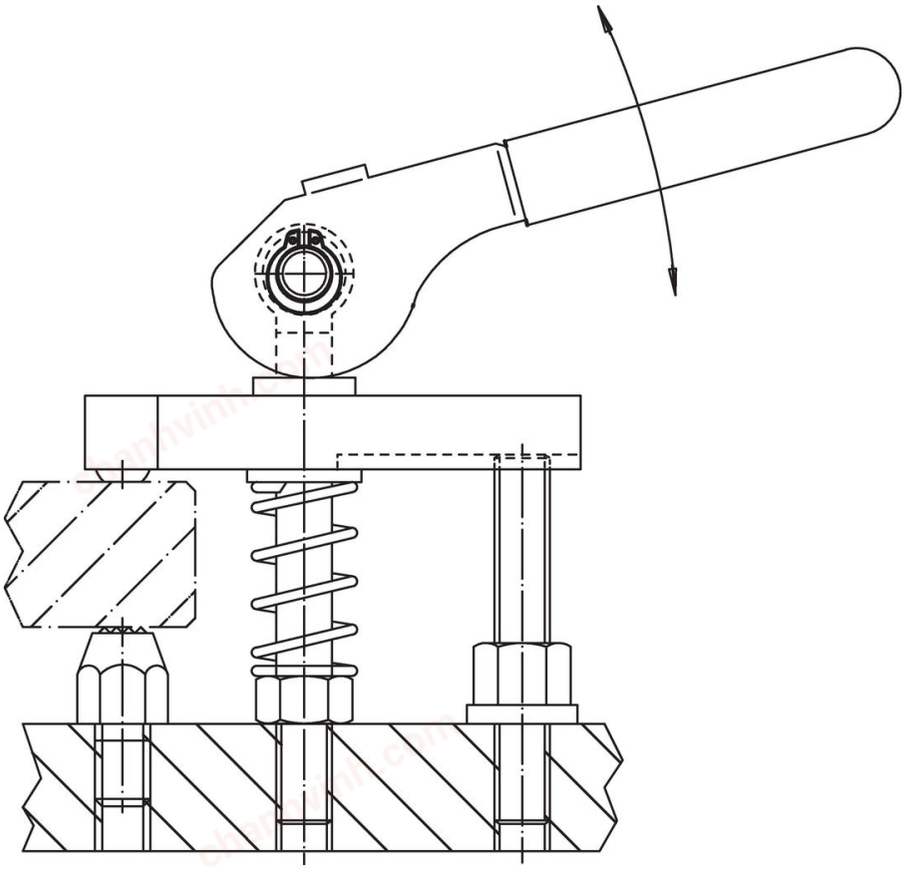

Compliance

RoHS-compliant
Compliant with Directive 2011/65/EU [RoHS].

Does not contain SVHC substances
No SVHC substances with more than 0.1% w/w contained - SVHC list [REACH] as of 04.02.2026.

SCIP-code
N/A

Does not contain Proposition 65 substances
No Proposition 65 substances included.
https://www.P65Warnings.ca.gov/

Free from Conflict Minerals
This product does not contain any substances designated as "conflict minerals" such as tantalum, tin, gold or tungsten from the Democratic Republic of Congo or adjacent countries.

POP-compliant
Contains no persistent organic pollutants – Stockholm Convention [POP] as of September 2025.

PFAS-compliant
Contains no per- and polyfluoroalkyl substances (PFAS).

TSCA-compliant
Agent concentration in this product does not exceed the specified threshold.