chanhvinh.com

Eccentric Quick Clamps • with female thread
EH 23390.



Product Description

For quick and easy clamping and releasing of workpieces.
When using the "adjustable" design (picture 2) the lever position can be moved.

Material

Support washer
- Thermoplastic PA, glass-fiber reinforced
- Thermoplastic POM, glass-fiber reinforced

Lever
- Zinc die-cast, plastic coated, black, similar to RAL 9005

Threaded part
- Steel, zinc-plated by galvanization
- Stainless steel 1.4305

Inner parts
- Steel, zinc-plated by galvanization
- Stainless steel 1.4305

Adjusting nut
- Steel, zinc-plated by galvanization
- Stainless steel 1.4305

Drawing

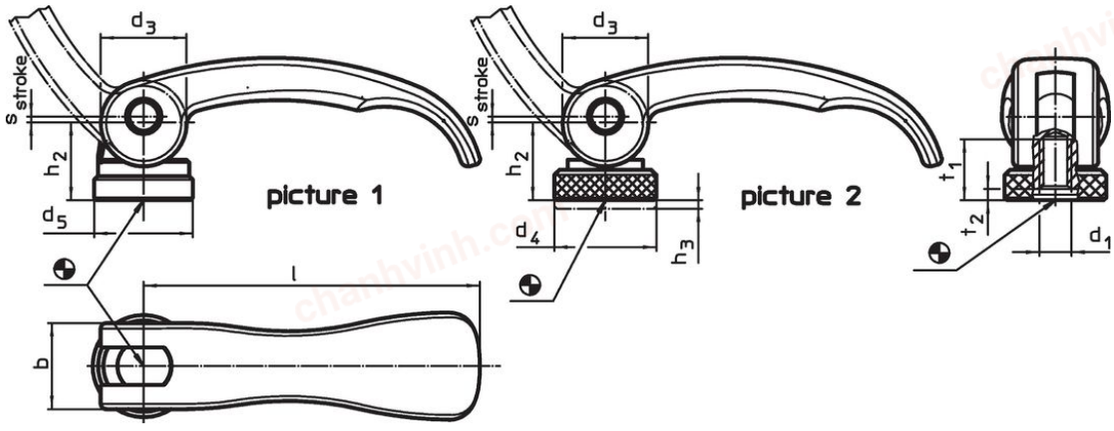

Order information

Dimensions										Stroke s at 90° lever position	max.		Art. No.
l	d_1	d_3	d_4	d_5	h_2 max.	Regulating-range h_3 min.	b	t_1	t_2 min. in clamping position				
[mm]										[mm]	[°C]	[g]	
with female thread – picture 1, Steel													
63	**M5**	16	–	18.5	16.4	–	16	13	3.0	0.75	80	60	23390.0003
63	**M6**	16	–	18.5	16.4	–	16	13	3.0	0.75	80	58	23390.0001
82	**M8**	20	–	22.5	19.5	–	20	15	3.7	1.00	80	118	23390.0002
with female thread, adjustable – picture 2, Steel													
63	**M5**	16	19	–	16.4	1.5	16	13	3.0	0.75	80	66	23390.0103
63	**M6**	16	19	–	16.4	1.5	16	13	3.0	0.75	80	65	23390.0101
82	**M8**	20	25	–	19.5	2.5	20	15	3.7	1.00	80	131	23390.0102
with female thread – picture 1, Stainless steel													
63	**M5**	16	–	18.5	16.4	–	16	13	3.0	0.75	80	60	23390.0203
63	**M6**	16	–	18.5	16.4	–	16	13	3.0	0.75	80	59	23390.0201
82	**M8**	20	–	22.5	19.5	–	20	15	3.7	1.00	80	118	23390.0202

chanhvinh.com

Dimensions										Stroke s at 90° lever position	max.		Art. No.
l	d_1	d_3	d_4	d_5	h_2 max.	Regulating-range h_3 min.	b	t_1	t_2 min. in clamping position				
[mm]										[mm]	[°C]	[g]	
with female thread, adjustable – picture 2, Stainless steel													
63	**M5**	16	19	–	16.4	1.5	16	13	3.0	0.75	80	66	23390.0303
63	**M6**	16	19	–	16.4	1.5	16	13	3.0	0.75	80	65	23390.0301
82	**M8**	20	25	–	19.5	2.5	20	15	3.7	1.00	80	133	23390.0302

Application example

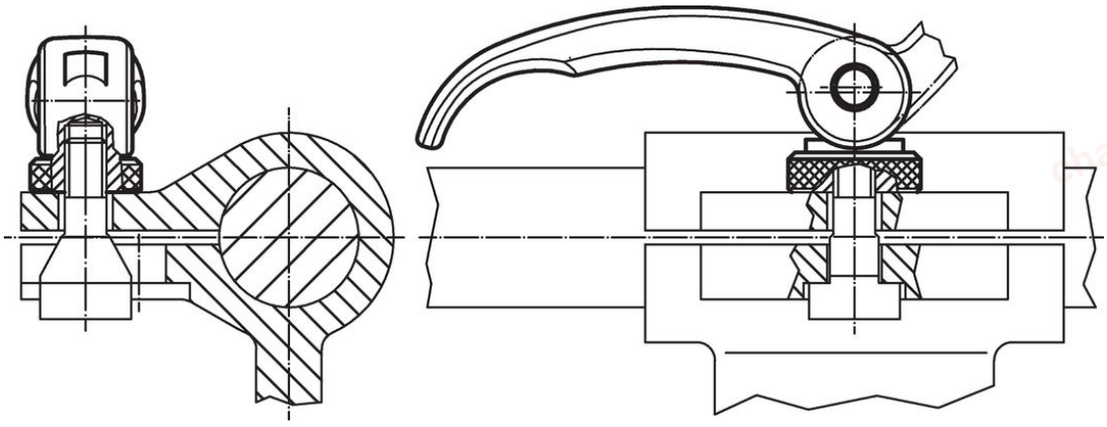

Compliance

For detailed compliance information please select the desired article number.