chanhvinh.com

Eccentric Levers • with fulcrum pin
EH 23390.



Product Description

The eccentric levers have an eccentric clamping range of 160°.

Material

Fulcrum Pin
- Stainless steel 1.4021, heat-treated

Eccentric part
- Steel St. 52-3, zinc phosphated
- Stainless steel 1.4301

Safety ring
- Stainless steel 1.4310

Plastic cap
- PVC, red

Drawing

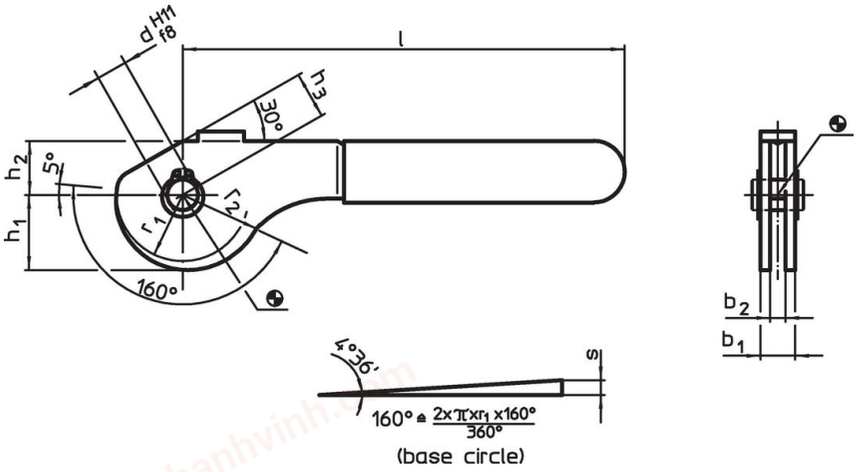

Order information

Dimensions									Eccentric stroke s	Total stroke r_2-h_3	max.		Art. No.
b_1	d H11 f8	l ~	r_1	r_2	b_2	h_1	h_2	h_3 ~					
[mm]									[mm]	[mm]	[°C]	[g]	
Steel													
13	**8**	114	17.2	21.07	9	19.54	14	12	3.87	9.07	60	92	23390.0408
17	**10**	138	21.6	26.45	12	24.54	17	15	4.85	11.45	60	179	23390.0410
20	**12**	157	28.0	34.29	14	31.81	21	18	6.29	16.29	60	287	23390.0412
Stainless steel													
13	**8**	114	17.2	21.07	9	19.54	14	12	3.87	9.07	60	93	23390.0508
17	**10**	138	21.6	26.45	12	24.54	17	15	4.85	11.45	60	179	23390.0510
20	**12**	157	28.0	34.29	14	31.81	21	18	6.29	16.29	60	290	23390.0512

chanhvinh.com

Application example

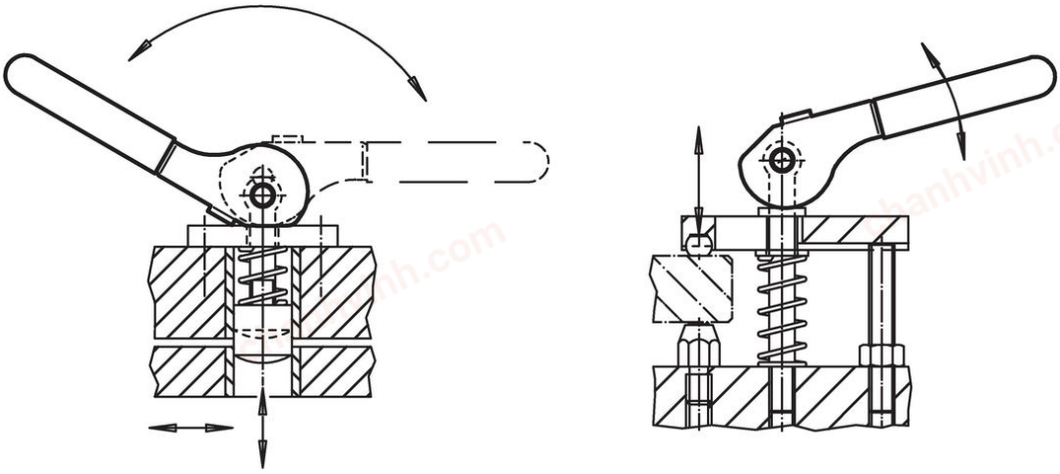

Compliance

For detailed compliance information please select the desired article number.