chanhvinh.com

Double Eccentric Levers • with fulcrum pin
EH 23380.



Product Description

Clamping on both sides.

Material

Fulcrum Pin
- Steel, case-hardened

Lever
- Alloyed case-hardened steel, case-hardened, blackened

Safety ring
- Spring steel

More information

References

Can be used in combination with swing bolts DIN 444, M12 (EH 22980.).

Further products

- Swing Bolts, DIN 444, form B
- Swing Bolts, DIN 444, form B, quality 8.8 high precision design

Drawing

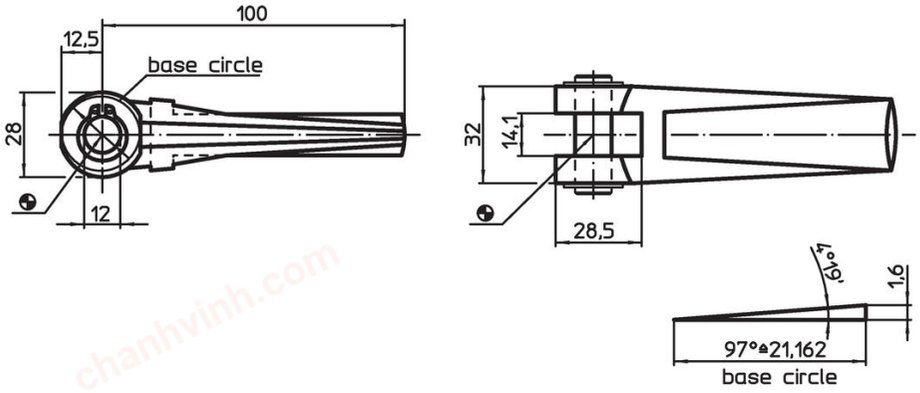

Order information

Dimensions Bore Hole [mm]	[g]	Art. No.
12	346	23380.0012

chanhvinh.com

Application example

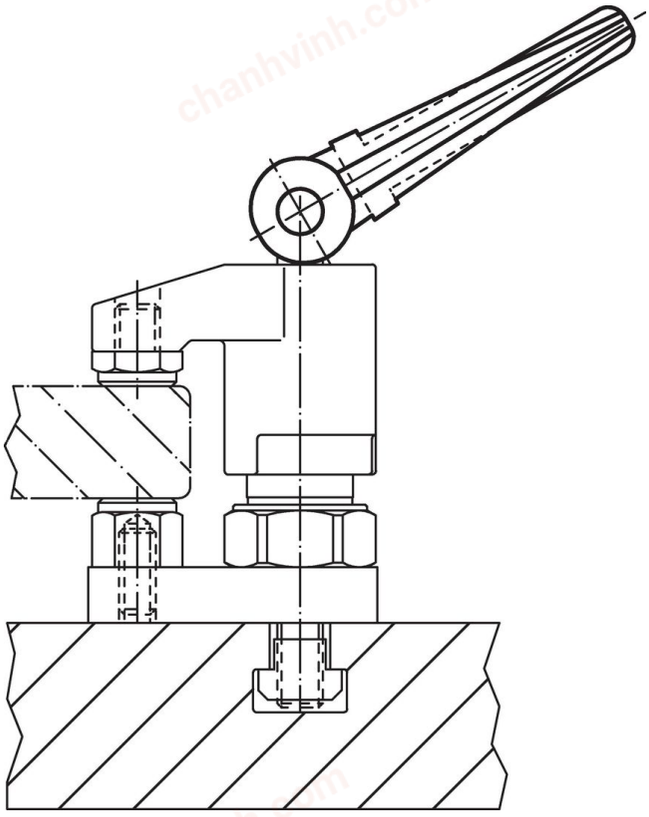

Compliance

RoHS-compliant
Contains lead – Compliant with Exemption 6(a)-I.

Contains SVHC substances >0,1% w/w
Contains lead - SVHC list [REACH] as of 04.02.2026.

SCIP-code
4f3ae8ca-59d6-46fa-bb71-439b4675448e

Contains Proposition 65 substances

Lead can lead to cancer, developmental disorders, and reproductive damage in men and to reproductive damage in women from exposure. https://www.P65Warnings.ca.gov/

Free from Conflict Minerals
This product does not contain any substances designated as "conflict minerals" such as tantalum, tin, gold or tungsten from the Democratic Republic of Congo or adjacent countries.

POP-compliant
Contains no persistent organic pollutants – Stockholm Convention [POP] as of September 2025.

PFAS-compliant
Contains no per- and polyfluoroalkyl substances (PFAS).

TSCA-compliant
Agent concentration in this product does not exceed the specified threshold.