chanhvinh.com

Centering Clamping Elements • with clamping balls, operation from the bottom

EH 23340.



PRODUCT DESCRIPTION

To be used for accurate centering and clamping in blind holes of workpieces with locating hole. Exact self-centering with a precision of ±0,025 mm. The clamping balls frictionally center and hold workpieces with raw or pre-machined surfaces down to the bearing points. Large adjustment stroke and a small building height are a feature of this center clamping element.
Mounting from either top or bottom.

Material

Body
- Tool steel, hardened, blackened

Spring
- Stainless steel

Clamping balls
- Stainless steel 1.4112, hardened and ground

Assembly

Assembly instructions for mounting from above: Remove clamping plate and screw. Screw in threaded pin from below, and tighten from above using female WS_2.

Operation

Operation from bottom manually or automatically with either pneumatic or hydraulic actuation.

MORE INFORMATION

Further products

Centering Clamping Elements, with clamping segments, operation from the bottom . . . . . → p. 566

DRAWING

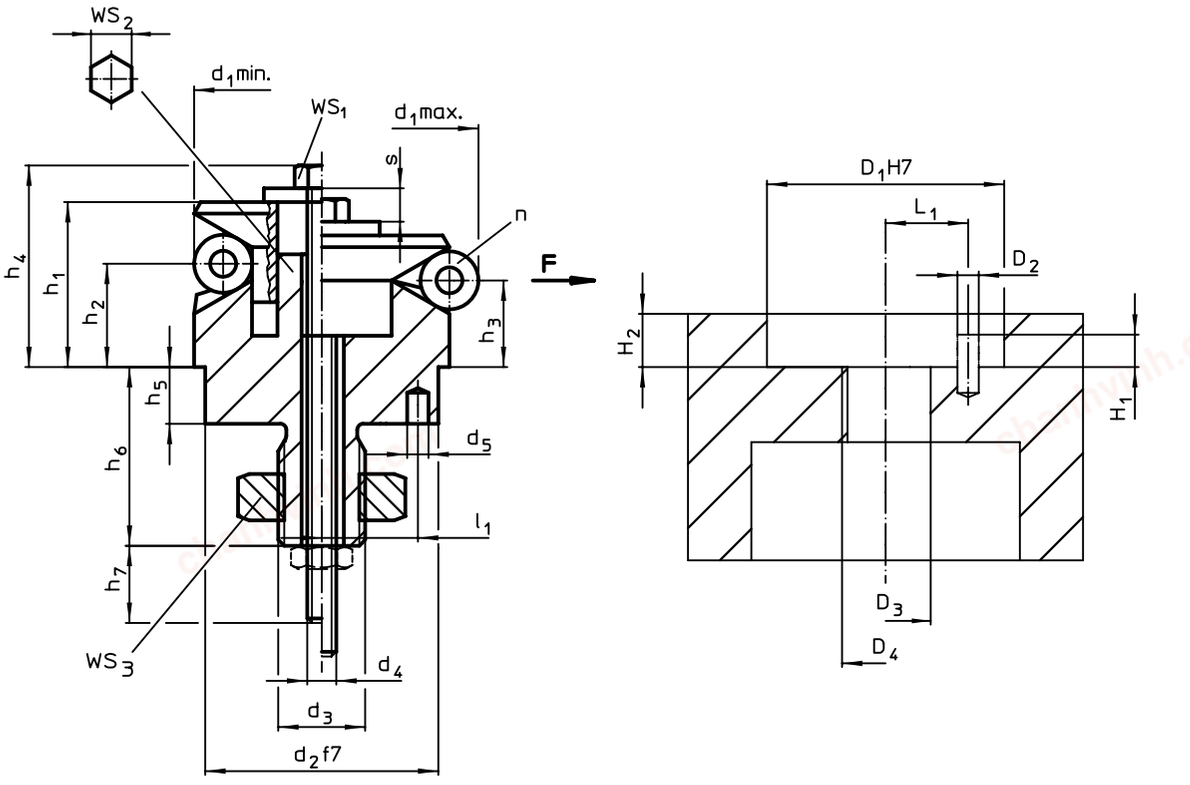

ORDER INFORMATION

Dimensions															Number of balls	Stroke	WS			Clamping force	Tightening torque	Location hole								Art. No.
d_1 min.	d_1 max.	d_2 f7	d_3	d_4	d_5 +0.3	h_1	h_2	h_3	h_4 -2	h_5	h_6 +1	h_7 ~	l_1 ±0.1	ball diameter	n	s	WS_1	WS_2	WS_3	F max.	max.	D_1 H7	D_2	D_3	D_4	H_1	H_2 +0.5	L_1 ±0.1		
[mm]																[mm]	[mm]			[kN]	[Nm]	[mm]							[g]	
11.7	**14.2**	10	M 5	M 3	1.5	9.9	3.9	3.2	12.7	3.5	11.0	13	3.5	2.5	3	1.3	5.5	4	8	0.5	2	10	1.5	5	M 5	2.0	3.5	3.5	13	23340.0312
14.5	**18.5**	12	M 6	M 3	2.0	14.2	9.8	8.6	17.0	5.5	14.1	12	4.5	4.0	3	2.3	5.5	3	10	3.5	2	12	2.0	6	M 6	2.5	5.5	4.5	28	23340.0314
18.5	**22.5**	15	M 8	M 4	2.5	16.5	11.6	10.4	20.4	7.5	18.2	14	5.5	4.0	3	2.3	7.0	5	13	4.0	5	15	2.5	8	M 8	3.5	7.5	5.5	52	23340.0318
22.5	**26.5**	20	M10	M 5	3.0	19.6	14.1	12.9	24.3	6.0	17.4	15	7.0	4.0	3	2.3	8.0	6	16	4.5	10	20	3.0	10	M10	3.5	6.0	7.0	83	23340.0322
26.5	**30.5**	20	M10	M 5	3.0	19.8	14.1	13.0	24.5	6.0	17.4	15	7.0	4.0	3	2.3	8.0	6	16	4.5	10	20	3.0	10	M10	3.5	6.0	7.0	103	23340.0326
30.5	**38.5**	25	M12	M 6	4.0	23.2	14.1	11.8	28.8	7.0	21.9	20	9.0	8.0	3	4.6	10.0	6	18	4.5	17	25	4.0	12	M12	3.5	7.0	9.0	153	23340.0330

→

chanhvinh.com

Dimensions															Number of balls n	Stroke s	WS			Clamping force F max.	Tightening torque max.	Location hole								Art. No.
d_1 min.	d_1 max.	d_2 f7	d_3	d_4	d_5 +0.3	h_1	h_2	h_3	h_4 -2	h_5	h_6 +1	h_7 ~	l_1 ±0.1	ball diameter			WS_1	WS_2	WS_3			D_1 H7	D_2	D_3	D_4	H_1	H_2 +0.5	L_1 ±0.1		
[mm]																[mm]	[mm]			[kN]	[Nm]	[mm]							[g]	
38.5	**46.5**	30	M12	M 6	4.0	27.1	18.0	15.5	33.0	7.5	22.5	20	11.0	8.0	6	4.6	10.0	8	18	6.5	17	30	4.0	12	M12	4.5	7.5	11.0	269	23340.0338
46.5	**54.5**	30	M12	M 6	4.0	27.2	18.0	15.7	33.1	7.5	22.5	20	11.0	8.0	6	4.6	10.0	8	18	6.5	17	30	4.0	12	M12	6.5	7.5	11.0	353	23340.0346
54.5	**70.5**	45	M14 x 1,5	M 8	5.0	40.6	23.7	19.1	49.9	9.0	24.5	32	15.0	16.0	6	9.2	13.0	10	21	8.0	43	45	5.0	14	M14 x 1,5	6.5	9.0	15.0	702	23340.0354
70.5	**86.5**	60	M16 x 1,5	M 8	5.0	46.1	28.3	23.7	55.4	10.0	29.4	20	17.0	16.0	6	9.2	13.0	12	24	10.0	43	60	5.0	16	M16 x 1,5	6.5	10.0	17.0	1326	23340.0370
86.5	**102.5**	60	M16 x 1,5	M10	5.0	51.2	30.3	25.7	61.6	10.0	29.4	25	25.0	16.0	6	9.2	16.0	12	24	12.5	79	60	5.0	16	M16 x 1,5	6.5	10.0	25.0	2000	23340.0386

APPLICATION EXAMPLE

