chanhvinh.com

Centering Clamping Elements • with clamping segments, operation from the bottom

EH 23340.



PRODUCT DESCRIPTION

For centering and clamping in blind holes of workpieces with locating hole. Exact self-centering with a precision of ±0,025 mm. Components with raw or machined surface can be centered positively and are pulled down on the contact points due to the ground clamping elements. The centering clamping element is characterised by large setting ranges and a compact construction height.
Mounting from either top or bottom.

Material

Body
- Tool steel, hardened, blackened

Spring
- Stainless steel

Clamping segments
- Stainless steel 1.4112, hardened and ground

Assembly

Assembly instructions for mounting from above: Remove clamping plate and screw. Screw in threaded pin from below, and tighten from above using female WS_2.

Operation

Operation from bottom manually or automatically with either pneumatic or hydraulic actuation.

MORE INFORMATION

Further products

Centering Clamping Elements, with clamping balls, operation from the bottom → p. 568

DRAWING

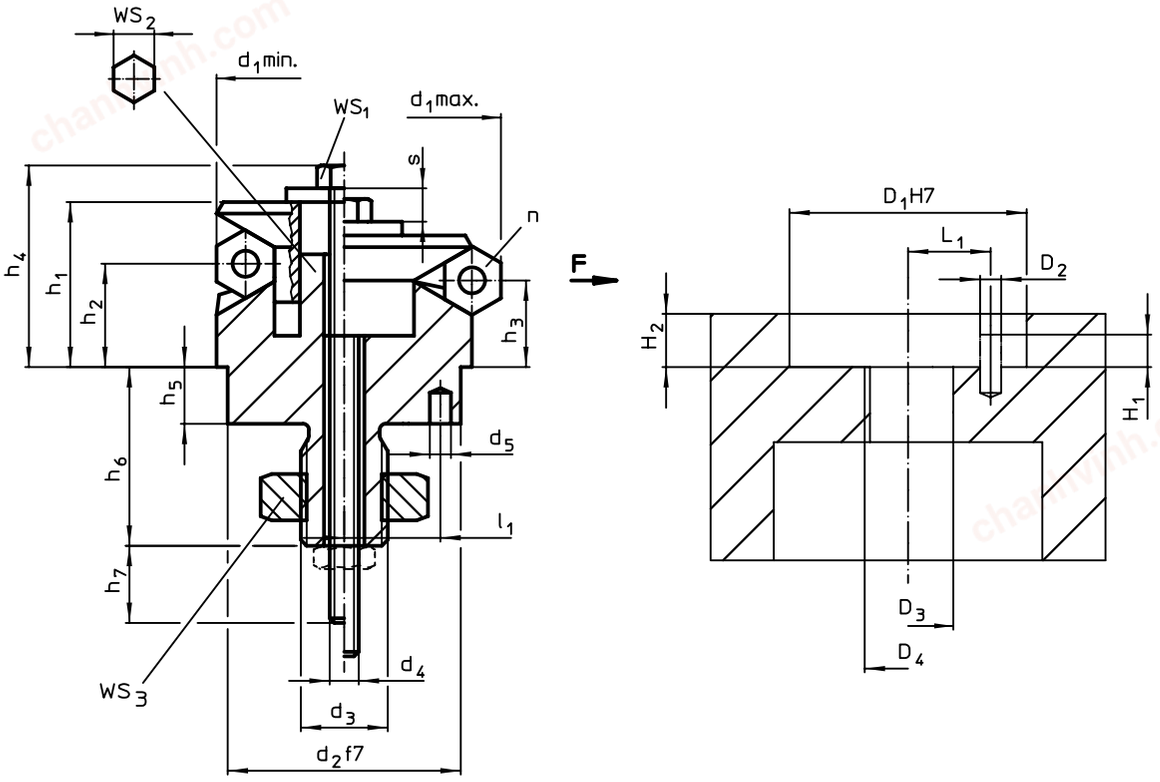

ORDER INFORMATION

Dimensions														Number of segments	Stroke	WS			Clamping force	Tightening torque	Location hole								Art. No.
d_1 min.	d_1 max.	d_2 f7	d_3	d_4	d_5 +0.3	h_1	h_2	h_3	h_4 -2	h_5	h_6 +1	h_7 ~	l_1 ±0.1	n	s	WS_1	WS_2	WS_3	F max.	max.	D_1 H7	D_2	D_3	D_4	H_1	H_2 +0.5	L_1 ±0.1		
[mm]															[mm]	[mm]			[kN]	[Nm]	[mm]							[g]	
14.5	**18.5**	12	M 6	M 3	2.0	14.2	9.8	8.6	17.0	5.5	14.1	12	4.5	3	2.3	5.5	3	10	3.5	2	12	2.0	6	M 6	2.5	5.5	4.5	21	23340.0114
18.5	**22.5**	15	M 8	M 4	2.5	16.6	11.5	10.4	20.5	7.5	18.2	14	5.5	3	2.3	7.0	5	13	4.0	5	15	2.5	8	M 8	3.5	7.5	5.5	51	23340.0120
22.5	**26.5**	20	M10	M 5	3.0	19.7	14.1	13.0	24.4	6.0	17.4	15	7.0	3	2.3	8.0	6	16	4.5	10	20	3.0	10	M10	3.5	6.0	7.0	82	23340.0122
26.5	**30.5**	20	M10	M 5	3.0	19.9	14.2	13.0	24.6	6.0	17.4	15	7.0	3	2.3	8.0	6	16	4.5	10	20	3.0	10	M10	3.5	6.0	7.0	104	23340.0126
30.5	**38.5**	25	M12	M 6	4.0	23.2	14.0	11.7	28.8	7.0	21.9	20	9.0	3	4.6	10.0	6	18	4.5	17	25	4.0	12	M12	3.5	7.0	9.0	154	23340.0130

→

chanhvinh.com

Dimensions														Number of segments n	Stroke s	WS			Clamping force F max.	Tightening torque max.	Location hole								Art. No.
d_1 min.	d_1 max.	d_2 f7	d_3	d_4	d_5 +0.3	h_1	h_2	h_3	h_4 -2	h_5	h_6 +1	h_7 ~	l_1 ±0.1			WS_1	WS_2	WS_3			D_1 H7	D_2	D_3	D_4	H_1	H_2 +0.5	L_1 ±0.1		
[mm]															[mm]	[mm]			[kN]	[Nm]	[mm]							[g]	
38.5	**46.5**	30	M12	M 6	4.0	27.2	18.0	15.5	33.1	7.5	22.5	20	11.0	6	4.6	10.0	8	18	6.5	17	30	4.0	12	M12	4.5	7.5	11.0	272	23340.0138
46.5	**54.5**	30	M12	M 6	4.0	27.2	18.0	15.7	33.1	7.5	22.5	20	11.0	6	4.6	10.0	8	18	6.5	17	30	4.0	12	M12	6.5	7.5	11.0	339	23340.0146
54.5	**70.5**	45	M14 x 1,5	M 8	5.0	40.7	23.7	19.1	50.0	9.0	24.5	32	15.0	6	9.2	13.0	10	21	8.0	43	45	5.0	14	M14 x 1,5	6.5	9.0	15.0	690	23340.0154
70.5	**86.5**	60	M16 x 1,5	M 8	5.0	46.0	28.1	23.5	55.3	10.0	29.4	20	17.0	6	9.2	13.0	12	24	10.0	43	60	5.0	16	M16 x 1,5	6.5	10.0	17.0	1349	23340.0170
86.5	**102.5**	60	M16 x 1,5	M10	5.0	51.1	30.1	25.5	61.5	10.0	29.4	25	25.0	6	9.2	16.0	12	24	12.5	79	60	5.0	16	M16 x 1,5	6.5	10.0	25.0	2000	23340.0186

APPLICATION EXAMPLE

