chanhvinh.com

Centering Clamping Elements • with clamping balls

EH 23340.



Product Description

To be used for accurate centering and clamping of workpieces with locating hole on which light spherical marks are acceptable. Exact self-centering with a precision of ±0,025 mm. The clamping balls frictionally center and hold workpieces with raw or pre-machined surfaces down to the bearing points. Large adjustment stroke and a small building height are a feature of this center clamping element.
Mounting from either top or bottom.

Material

Body
- Tool steel, hardened, blackened

Spring
- Stainless steel

Clamping balls
- Stainless steel 1.4112, hardened and ground

Assembly

Assembly instruction for mounting from above: Remove clamping plate and screw. Screw in threaded pin from below, and tighten from above using female WS_2.
Further or detailed information can be found in the assembly and operating instructions.

More information

Further products

- Centering Clamping Elements, with clamping segments
- Centering Clamping Elements, with clamping segments, operation from the bottom
- Centering Clamping Elements, with clamping balls, operation from the bottom

Drawing

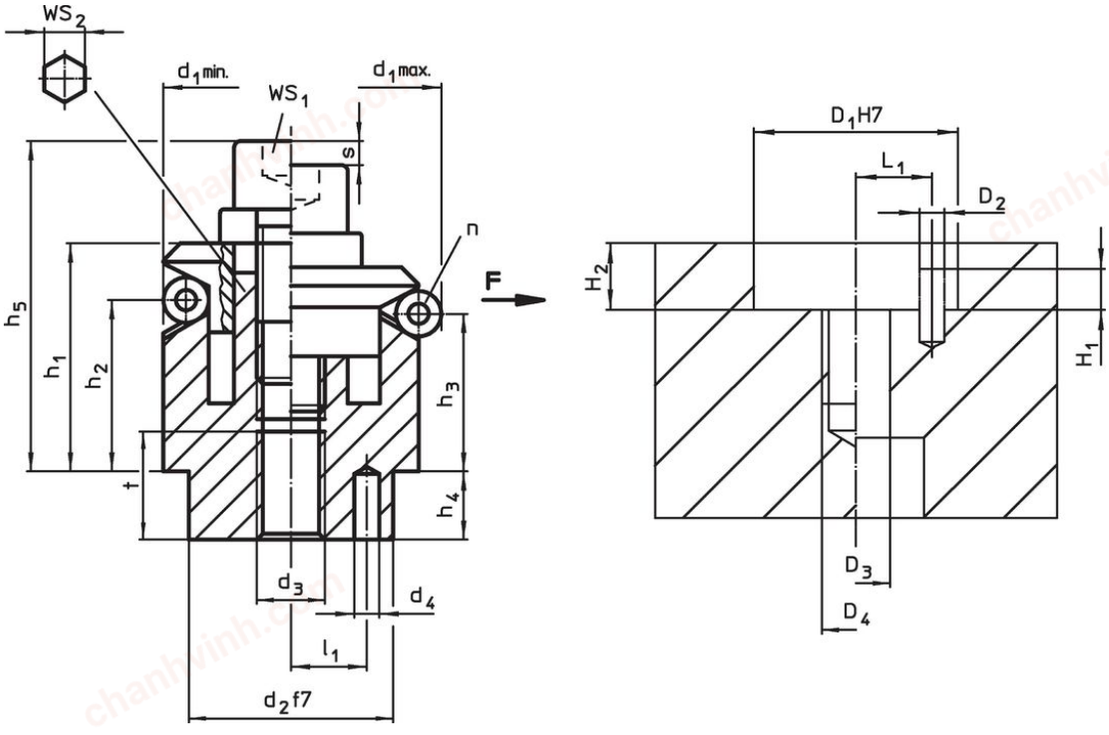

chanhvinh.com

Order information

Dimensions													Number of balls	Stroke	WS		Clamping force	Tightening torque	Location hole								Art. No.
d_1 min.	d_1 max.	d_2 f7	d_3	d_4 +0.3	h_1 -1	h_2	h_3	h_4	h_5 -2	l_1 ±0.1	Ball diameter	t	n	s	WS_1	WS_2	F max.	max.	D_1 H7	D_2	D_3	D_4	H_1	H_2 +0.5	L_1 ±0.1		
[mm]														[mm]	[mm]		[kN]	[Nm]	[mm]								
11.7	**14.2**	10	M 4	1.5	8.6	3.9	3.2	3.5	14.7	3.5	2.5	4	3	1.3	3	–	0.5	5	10	1.5	4	M 4	2.0	3.5	3.5	15.0 g	23340.0212[1]
14.5	**18.5**	12	M 4	2.0	14.2	9.8	8.6	5.5	19.2	4.5	4.0	6	3	2.3	3	5	3.5	5	12	2.0	4	M 4	2.5	5.5	4.5	19.0 g	23340.0214
18.5	**22.5**	15	M 5	2.5	16.5	11.6	10.4	7.5	22.7	5.5	4.0	7	3	2.3	4	5	4.5	10	15	2.5	5	M 5	3.5	7.5	5.5	38.0 g	23340.0218
22.5	**26.5**	20	M 6	3.0	19.6	14.1	12.9	6.0	28.6	7.0	4.0	8	3	2.3	5	6	5.0	17	20	3.0	6	M 6	3.5	6.0	7.0	77.0 g	23340.0222
26.5	**30.5**	20	M 6	3.0	19.8	14.1	13.0	6.0	28.8	7.0	4.0	8	3	2.3	5	6	5.0	17	20	3.0	6	M 6	3.5	6.0	7.0	96.0 g	23340.0226
30.5	**38.5**	25	M 6	4.0	23.2	14.1	11.8	7.0	32.2	9.0	8.0	8	3	4.6	5	6	5.0	17	25	4.0	6	M 6	3.5	7.0	9.0	119.0 g	23340.0230
38.5	**46.5**	30	M 8	4.0	27.2	18.0	15.7	7.5	39.2	11.0	8.0	10	6	4.6	6	8	6.5	43	30	4.0	8	M 8	4.5	7.5	11.0	254.0 g	23340.0238
46.5	**54.5**	30	M 8	4.0	27.1	18.0	15.7	7.5	39.2	11.0	8.0	10	6	4.6	6	8	6.5	43	30	4.0	8	M 8	6.5	7.5	11.0	345.0 g	23340.0246
54.5	**70.5**	45	M10	5.0	40.6	23.7	19.1	9.0	54.6	15.0	16.0	12	6	9.2	8	10	8.0	79	45	5.0	10	M10	6.5	9.0	15.0	667.0 g	23340.0254
70.5	**86.5**	60	M12	5.0	46.1	28.3	23.7	10.0	63.1	17.0	16.0	15	6	9.2	10	12	10.0	141	60	5.0	12	M12	6.5	10.0	17.0	1.3 kg	23340.0270
86.5	**102.5**	60	M16	5.0	51.2	30.3	25.6	10.0	72.2	25.0	16.0	15	6	9.2	14	17	10.0	354	60	5.0	16	M16	6.5	10.0	25.0	2.1 kg	23340.0286

[1] no WS_2, bolt-on from the top using a clamping screw and threaded pin

Application example

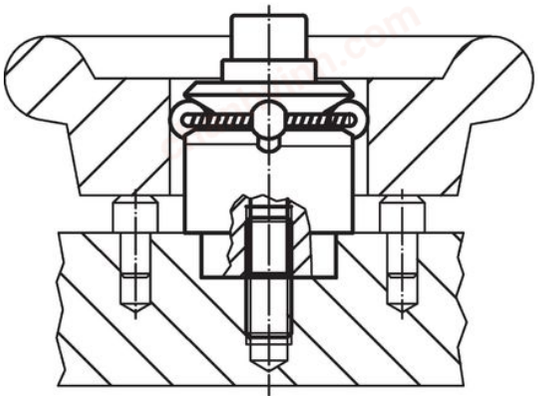

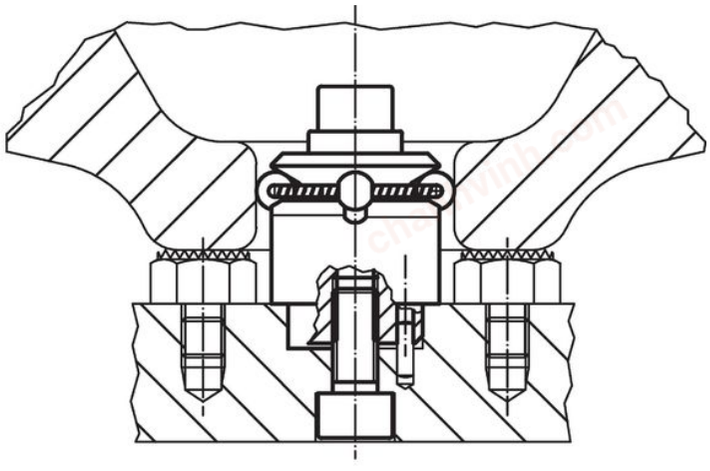

chanhvinh.com

Compliance

RoHS-compliant
Compliant with Directive 2011/65/EU [RoHS].

Does not contain SVHC substances
No SVHC substances with more than 0.1% w/w contained - SVHC list [REACH] as of 04.02.2026.

SCIP-code
N/A

Contains Proposition 65 substances


Nickel can cause cancer from exposure.
https://www.P65Warnings.ca.gov/

Free from Conflict Minerals
This product does not contain any substances designated as "conflict minerals" such as tantalum, tin, gold or tungsten from the Democratic Republic of Congo or adjacent countries.

POP-compliant
Contains no persistent organic pollutants – Stockholm Convention [POP] as of September 2025.

PFAS-compliant
Contains no per- and polyfluoroalkyl substances (PFAS).

TSCA-compliant
Agent concentration in this product does not exceed the specified threshold.