chanhvinh.com

Centering Clamping Elements • with clamping segments

EH 23340.



Product Description

For clamping and centering of workpieces with internal bore. Exact self centering with a precision of ±0,025 mm. Due to the clamping segments being ground, workpieces with raw and/or machined surfaces can be frictionally connected, centered and held down at the seats. Large adjustment stroke and a low building height are a feature of the centering clamping element.
Mounting from either top or bottom.

Material

Body
- Tool steel, hardened, blackened

Spring
- Stainless steel

Clamping segments
- Stainless steel 1.4112, hardened and ground

Assembly

Assembly instruction for mounting from above: Remove clamping plate and screw. Screw in threaded pin from below, and tighten from above using female WS_2.
Further or detailed information can be found in the assembly and operating instructions.

More information

Further products

- Centering Clamping Elements, with clamping balls
- Centering Clamping Elements, with clamping segments, operation from the bottom
- Centering Clamping Elements, with clamping balls, operation from the bottom

Drawing

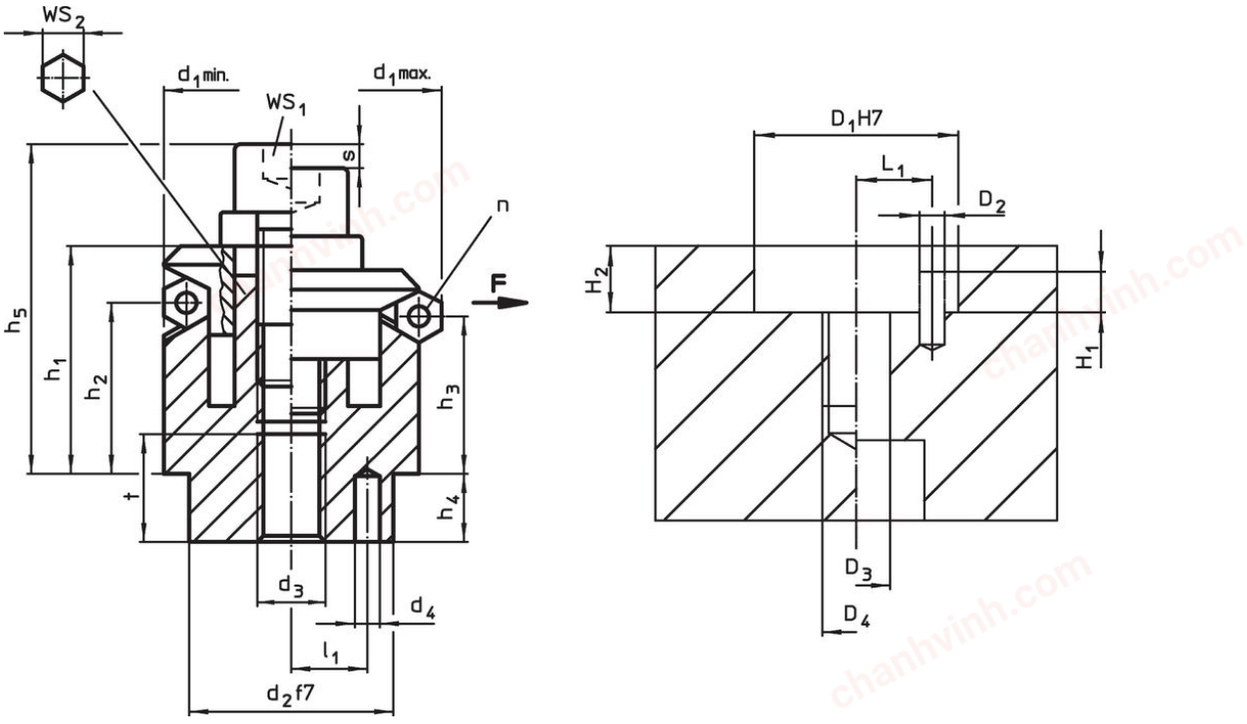

Order information

Dimensions												Number of segments	Stroke	WS		Clamping force	Tightening torque	Location hole								Art. No.
d_1 min.	d_1 max.	d_2 f7	d_3	d_4 +0.3	h_1 -1	h_2	h_3	h_4	h_5 -2	l_1 ±0.1	t	n	s	WS_1	WS_2	F max.	max.	D_1 H7	D_2	D_3	D_4	H_1	H_2 +0.5	L_1 ±0.1		
[mm]													[mm]	[mm]		[kN]	[Nm]	[mm]								
14.5	**18.5**	12	M 4	2.0	14.3	9.8	8.6	5.5	19.3	4.5	6	3	2.3	3	5	3.5	5	12	2.0	4	M 4	2.0	5.5	4.5	26.0 g	23340.0014
18.5	**22.5**	15	M 5	2.5	16.6	11.5	10.4	7.5	22.8	5.5	7	3	2.3	4	5	4.5	10	15	2.5	5	M 5	2.5	7.5	5.5	45.0 g	23340.0018
22.5	**26.5**	20	M 6	3.0	19.7	14.1	13.0	6.0	28.7	7.0	8	3	2.3	5	6	5.0	17	20	3.0	6	M 6	3.0	6.0	7.0	73.0 g	23340.0022
26.5	**30.5**	20	M 6	3.0	19.9	14.2	13.0	6.0	28.9	7.0	8	3	2.3	5	6	5.0	17	20	3.0	6	M 6	3.0	6.0	7.0	96.0 g	23340.0026

chanhvinh.com

Dimensions												Number of segments	Stroke	WS		Clamping force	Tightening torque	Location hole								Art. No.
d_1 min.	d_1 max.	d_2 f7	d_3	d_4 +0.3	h_1 -1	h_2	h_3	h_4	h_5 -2	l_1 ±0.1	t	n	s	WS_1	WS_2	F max.	max.	D_1 H7	D_2	D_3	D_4	H_1	H_2 +0.5	L_1 ±0.1		
[mm]													[mm]	[mm]		[kN]	[Nm]	[mm]								
30.5	**38.5**	25	M 6	4.0	23.2	14.0	11.7	7.0	32.2	9.0	8	3	4.6	5	6	5.0	17	25	4.0	6	M 6	4.0	7.0	9.0	132.0 g	23340.0030
38.5	**46.5**	30	M 8	4.0	27.2	18.0	15.5	7.5	39.2	11.0	10	6	4.6	6	8	6.5	43	30	4.0	8	M 8	4.0	7.5	11.0	263.0 g	23340.0038
46.5	**54.5**	30	M 8	4.0	27.2	18.0	15.7	7.5	39.2	11.0	10	6	4.6	6	8	6.5	43	30	4.0	8	M 8	4.0	7.5	11.0	348.0 g	23340.0046
54.5	**70.5**	45	M10	5.0	40.7	23.7	19.1	9.0	54.7	15.0	12	6	9.2	8	10	8.0	79	45	5.0	10	M10	5.0	9.0	15.0	690.0 g	23340.0054
70.5	**86.5**	60	M12	5.0	46.0	28.3	23.6	10.0	63.0	17.0	15	6	9.2	10	12	10.0	141	60	5.0	12	M12	5.0	10.0	17.0	1.3 kg	23340.0070
86.5	**102.5**	60	M16	5.0	51.1	30.3	25.6	10.0	72.1	25.0	15	6	9.2	14	17	10.0	354	60	5.0	16	M16	5.0	10.0	25.0	2.1 kg	23340.0086

Application example

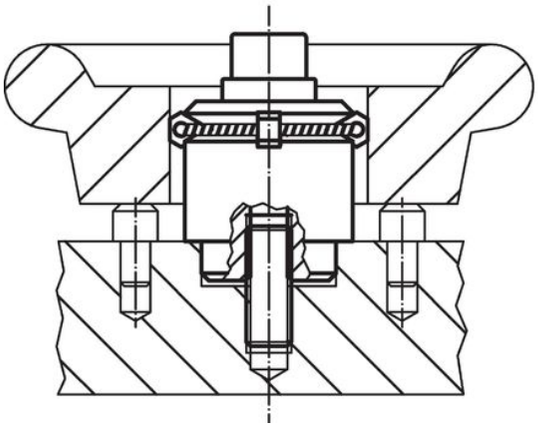

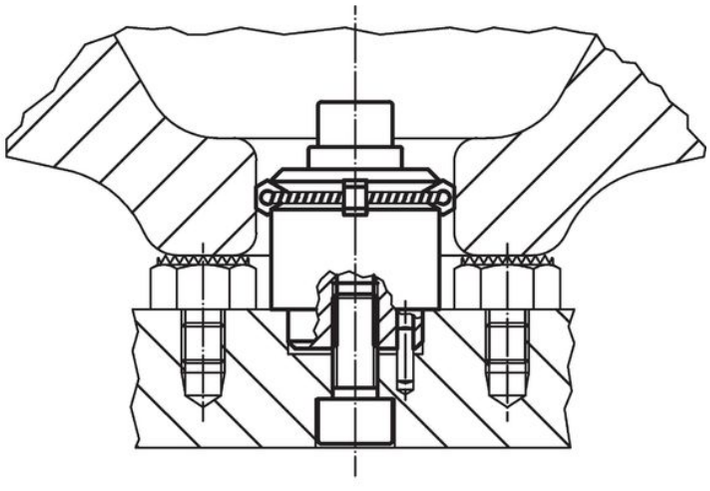

Compliance

RoHS-compliant
Compliant with Directive 2011/65/EU [RoHS].

Does not contain SVHC substances
No SVHC substances with more than 0.1% w/w contained - SVHC list [REACH] as of 04.02.2026.

SCIP-code
N/A

Contains Proposition 65 substances
Nickel can cause cancer from exposure.
https://www.P65Warnings.ca.gov/

Free from Conflict Minerals
This product does not contain any substances designated as "conflict minerals" such as tantalum, tin, gold or tungsten from the Democratic Republic of Congo or adjacent countries.

POP-compliant
Contains no persistent organic pollutants – Stockholm Convention [POP] as of September 2025.

PFAS-compliant
Contains no per- and polyfluoroalkyl substances (PFAS).

TSCA-compliant
Agent concentration in this product does not exceed the specified threshold.