chanhvinh.com

Toggle Clamps Push-Pull Type • with fastening thread

EH 23330.



Product Description

Due to their favourable power to movement ratio and their easy action the toggle clamps are versatile applicable for a wide rang of uses.
These toggle clamps can be used in the metal working industry when drilling, welding, bending, grinding, testing and fitting as well as in the wood and plastic industry in glueing, drilling, cutting and milling jigs.
The "toggle" principle of the toggle clamp allows a large and quick opening of the clamp. If unclamped the workpieces are completely cleared for unimpeded removal. The large power transmission results maximum clamping force by low hand force. The clamps are self-arresting they remain locked, resisting the force produced when machining components.
The toggle clamps are manufactured from high quality components and are designed for maintenance-free continuous use.
An oil resistant ergonomic 2-component handle, with slip-proof, soft surface and large grip area for high ease of use.

Material

Clamp
- Steel, zinc-plated by galvanization, passivated

Rivet
- Stainless steel

Handle
- plastic

Clamping screw
- Steel, tempered, zinc-plated by galvanization

Clamping cap
- Rubber, black

More information

References

Replacement clamping screws are available as accessories in the online shop.

Drawing

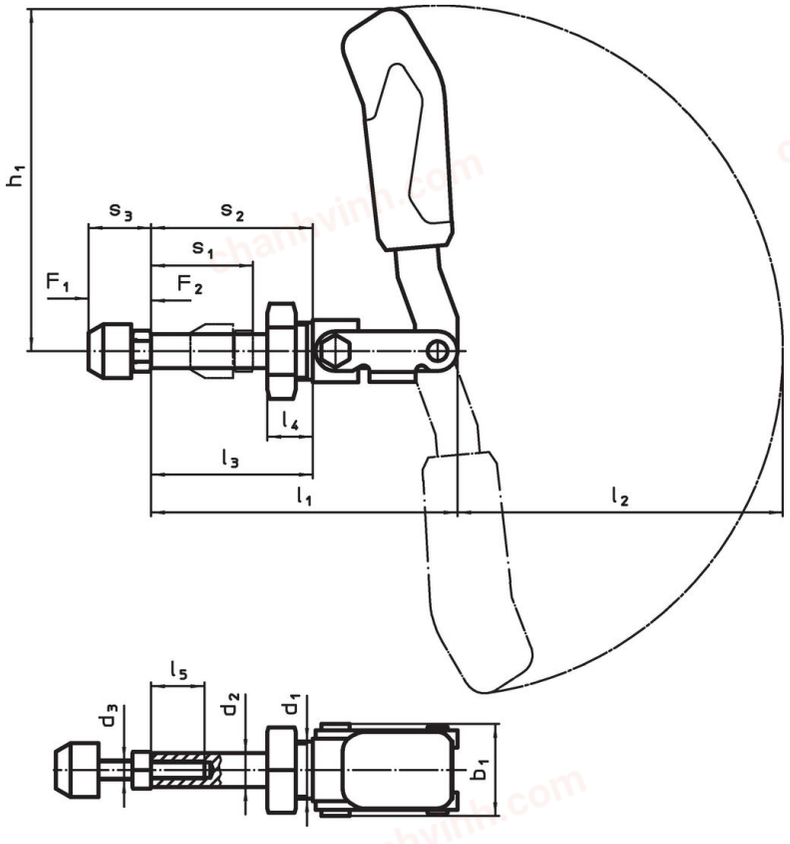

chanhvinh.com

Order information

Nominal size	Clamping screw	Dimensions													Stroke s_1	Holding force					Art. No.
		d_1	d_2	d_3	b_1	h_1	l_1	l_2	l_3	l_4	l_5	s_2	s_3 min.	s_3 max.		F_1	F_2	min.	max.		
	[mm]	[mm]													[mm]	[kN]		[°C]		[g]	
3	M 6 x 25	M16 x 1,5	10	M 6	30.5	73	68.5	68	36	13	15	36	17	25	21.5	1.0	1.0	-10	80	152	23330.2103
4	M 8 x 35	M20 x 1,5	12	M 8	33.0	123	108.0	115	57	16	25	57	22	35	40.0	2.5	2.5	-10	80	327	23330.2104
6	M12 x 50	M24 x 1,5	16	M12	49.0	149	175.0	139	92	24	45	92	30	50	67.0	4.0	4.0	-10	80	927	23330.2106

Accessories

	d_2 [mm]	[g]	Art. No.
Clamping screw (spare part of toggle clamps push-pull type)			
No Photo available	**M 6 x 25**	11	23330.9013
	M 8 x 35	25	23330.9014
	M12 x 50	73	23330.9016

Application example

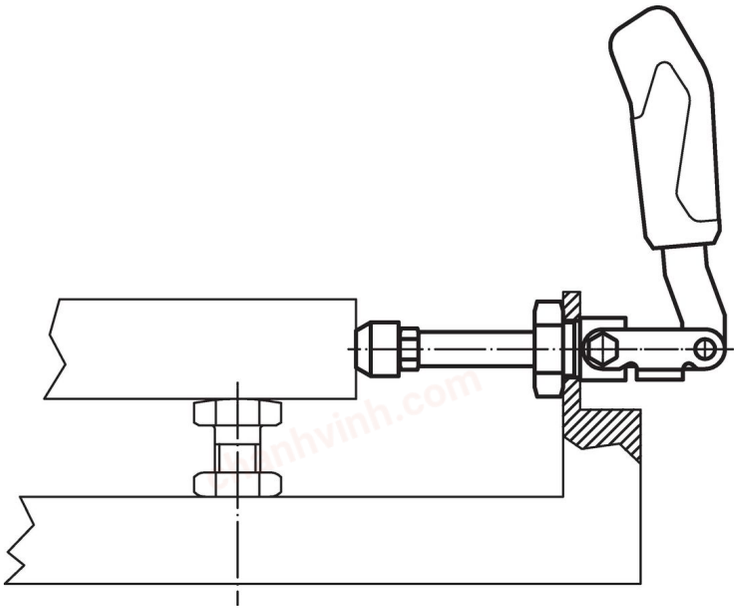

Compliance

For detailed compliance information please select the desired article number.