chanhvinh.com

Horizontal Toggle Clamps • with horizontal base and safety lock

EH 23330.

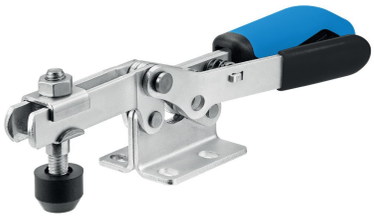

Product Description

Due to their favourable power to movement ratio and their easy action the toggle clamps are versatile applicable for a wide rang of uses.
These toggle clamps can be used in the metal working industry when drilling, welding, bending, grinding, testing and fitting as well as in the wood and plastic industry in glueing, drilling, cutting and milling jigs.
The "toggle" principle of the toggle clamp allows a large and quick opening of the clamp. If unclamped the workpieces are completely cleared for unimpeded removal. The large power transmission results maximum clamping force by low hand force. The clamps are self-arresting they remain locked, resisting the force produced when machining components.
The toggle clamps are manufactured from high quality components and are designed for continuous use.
A oil resistant ergonomic 2-component handle, with increased grip area with soft surface for high ease of use.
The quickly adjustable clamping screws are provided with a loss prevention.

Material

Clamp
- Steel, zinc-plated by galvanization, passivated

Rivet
- Stainless steel

Handle
- plastic

Clamping screw
- Steel, tempered, zinc-plated by galvanization

Clamping cap
- Rubber, black

Plastic cap
- PVC, black

More information

References

Replacement clamping screws are available as accessories in the online shop.

Drawing

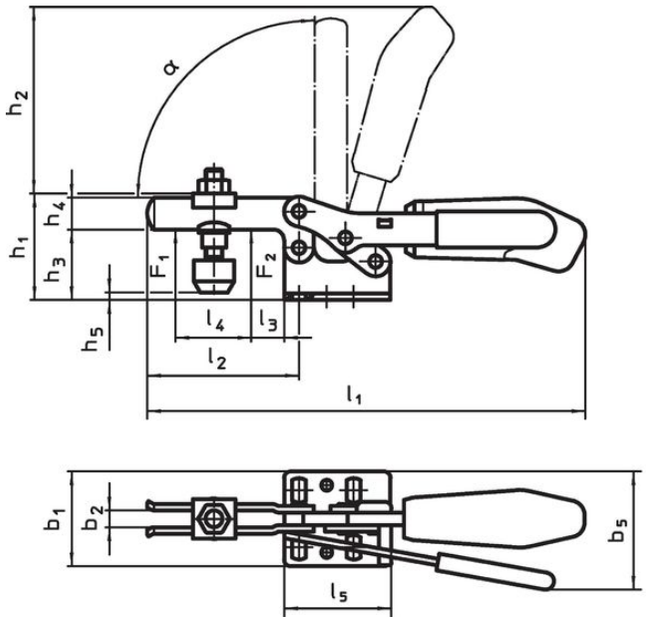

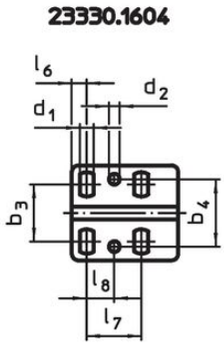

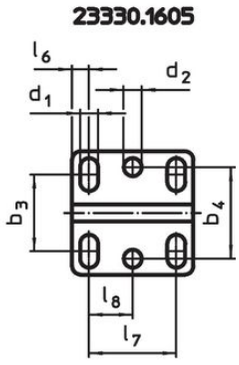

chanhvinh.com

Order information

Nominal size	Clamping screw	Dimensions																		Holding force		α				Art. No.
		d_1	d_2	b_1	b_2	b_3	b_4	b_5	h_1	h_2	h_3	h_4	l_1	l_2	l_3	l_4	l_5	l_6	l_7	l_8	F_1	F_2		min.	max.		
	[mm]	[mm]																			[kN]			[°C]		[g]	
Steel																											
4	M8 x 45	6.5	5.1	45.5	8	22 – 31.8	31.6	56	48.5	86.0	32	15	206	73	14	38	50	7	25.7	13	1.8	2.5	90°	-10	80	401	23330.1604
5	M8 x 65	8.5	8.5	58.0	10	29 – 43.0	43.0	83	75.0	126.5	45	20	287	113	27	63	57	8	41.0	21	2.0	3.0	90°	-10	80	833	23330.1605

Accessories

	d_2 [mm]	[g]	Art. No.
Clamping screw (spare part of toggle clamp)			
	**M8 x 45**	38	23330.9005
	M8 x 65	57	23330.9006

Compliance

For detailed compliance information please select the desired article number.