chanhvinh.com

Toggle Clamps Hook Type • vertical, with horizontal base

EH 23330.



Product Description

Due to their favourable power to movement ratio and their easy action the toggle clamps are versatile applicable for a wide rang of uses.
The toggle clamps are manufactured from high quality components and are designed for maintenance-free continuous use.
An oil resistant ergonomic 2-component handle, with slip-proof, soft surface and large grip area for high ease of use.

Material

Clamp
- Steel, zinc-plated by galvanization, passivated

Rivet
- Stainless steel

Handle
- plastic

Counter catch
- Steel, zinc-plated by galvanization, passivated

Drawing

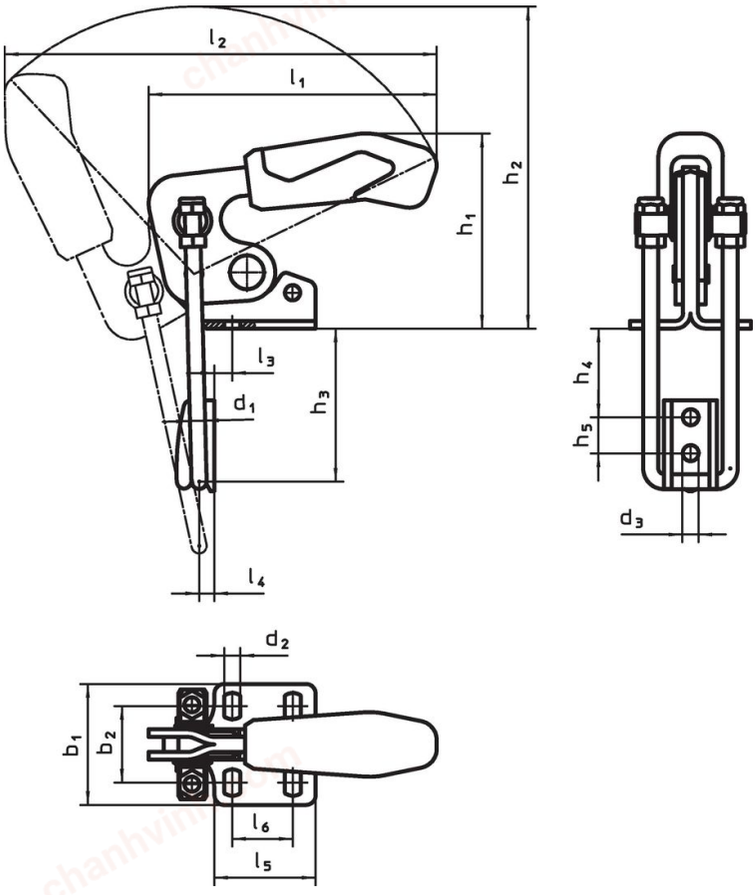

Order information

Nominal size	Dimensions																		Holding force				Art. No.
	d_1	d_2	d_3	b_1	b_2	h_1	h_2	h_3 min.	h_3 max.	h_4 min.	h_4 max.	h_5	l_1	l_2	l_3	l_4	l_5	l_6	F_1	min.	max.		
	[mm]																		[kN]	[°C]		[g]	
Steel																							
3	4	5.2	5.2	38	19.5 – 23.5	47.0	99	24.0	49	5	30	11	91	158	6.4	5	26	13	1.6	-10	80	150	23330.5003
4	6	6.5	6.5	48	24.5 – 32.0	70.0	136	34.5	64	7	36	14	125	190	8.0	6	35	19	3.2	-10	80	358	23330.5004
5	8	8.5	8.5	65	35.0 – 46.0	94.5	168	43.0	81	9	47	19	151	239	9.5	8	54	32	7.0	-10	80	791	23330.5005

Compliance

RoHS-compliant
Compliant with Directive 2011/65/EU [RoHS].

Does not contain SVHC substances
No SVHC substances with more than 0.1% w/w contained - SVHC list [REACH] as of 04.02.2026.

SCIP-code
N/A

Does not contain Proposition 65 substances
No Proposition 65 substances included.
https://www.P65Warnings.ca.gov/

Free from Conflict Minerals
This product does not contain any substances designated as "conflict minerals" such as tantalum, tin, gold or tungsten from the Democratic Republic of Congo or adjacent countries.

POP-compliant
Contains no persistent organic pollutants – Stockholm Convention [POP] as of September 2025.

PFAS-compliant
Contains no per- and polyfluoroalkyl substances (PFAS).

TSCA-compliant
Agent concentration in this product does not exceed the specified threshold.