chanhvinh.com

Horizontal Toggle Clamps • with horizontal base and solid support arm

EH 23330.

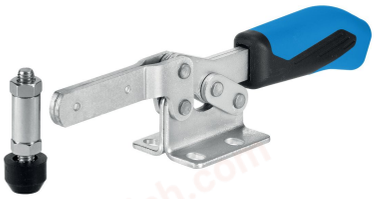

Product Description

Due to their favourable power to movement ratio and their easy action the toggle clamps are versatile applicable for a wide rang of uses.
These toggle clamps can be used in the metal working industry when drilling, welding, bending, grinding, testing and fitting as well as in the wood and plastic industry in glueing, drilling, cutting and milling jigs.
The "toggle" principle of the toggle clamp allows a large and quick opening of the clamp. If unclamped the workpieces are completely cleared for unimpeded removal. The large power transmission results maximum clamping force by low hand force. The clamps are self-arresting they remain locked, resisting the force produced when machining components.
The toggle clamps are manufactured from high quality components and are designed for maintenance-free continuous use.
An oil resistant ergonomic 2-component handle, with slip-proof, soft surface and large grip area for high ease of use.

Material

Clamp
- Steel, zinc-plated by galvanization, passivated

Rivet
- Stainless steel

Handle
- plastic

Clamping screw
- Steel, tempered, zinc-plated by galvanization

Clamping cap
- Rubber, black

Assembly

The clamping screw must be welded to the support arm in the desired position.

Drawing

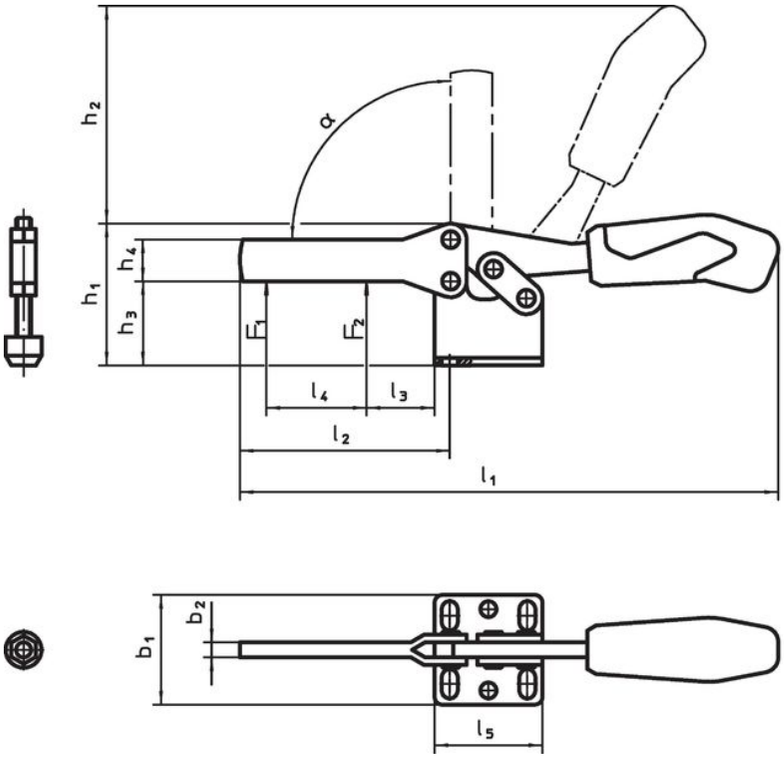

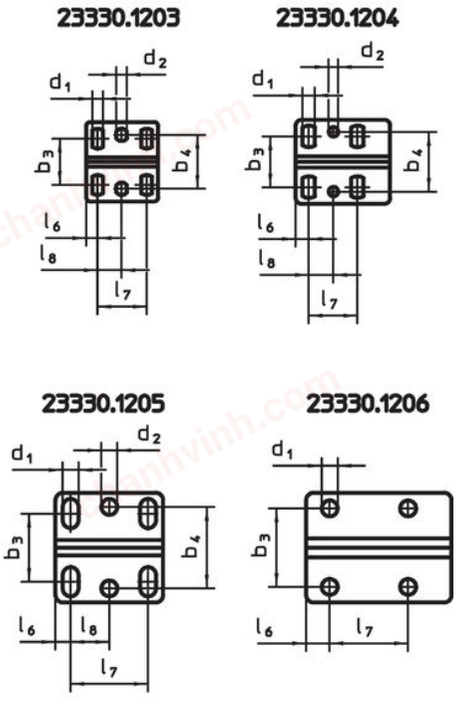

chanhvinh.com

Order information

Nominal size	Clamping screw	Dimensions																				Holding force		α				Art. No.
		d_1	d_2	b_1	b_2	b_3	b_4	h_1	h_2	h_3	h_4	h_5 min.	h_5 max.	l_1	l_2	l_3	l_4	l_5	l_6	l_7	l_8	F_1	F_2		min.	max.		
	[mm]	[mm]																				[kN]			[°C]			
Steel																												
3	M 6 x 35	5.6	5.6	42.0	5	19.5 – 29.5	28.5	45.0	66	24	13	-2.0	7.5	161	63	24	35	38	6.0	26.0	13	1.0	1.2	90°	-10	80	196.0 g	23330.1203
4	M 8 x 45	6.5	5.1	45.5	6	22.0 – 31.8	32.0	48.5	86	32	15	-3.5	11.0	205	72	32	44	50	7.0	26.0	13	1.8	2.5	90°	-10	80	400.0 g	23330.1204
5	M 8 x 65	8.5	8.5	58.0	8	29.0 – 43.0	43.0	75.0	114	45	20	-6.0	22.0	280	111	45	66	57	8.0	41.0	21	2.0	3.0	90°	-10	80	716.0 g	23330.1205
6	M12 x 80	8.5	–	58.0	10	41.5	–	73.0	128	46	25	-13.0	12.5	320	121	46	78	77	12.5	41.5	–	3.0	5.0	90°	-10	80	1.2 kg	23330.1206

Compliance

RoHS-compliant
Compliant with Directive 2011/65/EU [RoHS].

Does not contain SVHC substances
No SVHC substances with more than 0.1% w/w contained - SVHC list [REACH] as of 04.02.2026.

SCIP-code
N/A

Does not contain Proposition 65 substances
No Proposition 65 substances included.
https://www.P65Warnings.ca.gov/

Free from Conflict Minerals
This product does not contain any substances designated as "conflict minerals" such as tantalum, tin, gold or tungsten from the Democratic Republic of Congo or adjacent countries.

POP-compliant
Contains no persistent organic pollutants – Stockholm Convention [POP] as of September 2025.

PFAS-compliant
Contains no per- and polyfluoroalkyl substances (PFAS).

TSCA-compliant
Agent concentration in this product does not exceed the specified threshold.