chanhvinh.com

Combination Clamps • with horizontal base

EH 23330.



Product Description

The combination clamp combines a toggle clamp push-pull type and a vertical toggle clamp in one clamp. Thus the use of different toggle clamps is not necessary. The horizontal and vertical clamping movement is achieved by simple operation using an ergonomic handle. Simultaneous exact positioning and secure clamping of the component is guaranteed.
The toggle clamps are manufactured from high quality components and are designed for maintenance-free continuous use.
An oil resistant ergonomic 2-component handle, with slip-proof, soft surface and large grip area for high ease of use.

Material

Clamp
- Steel, zinc-plated by galvanization, passivated

Rivet
- Stainless steel

Handle
- plastic

Clamping screw
- Steel, tempered, zinc-plated by galvanization

Drawing

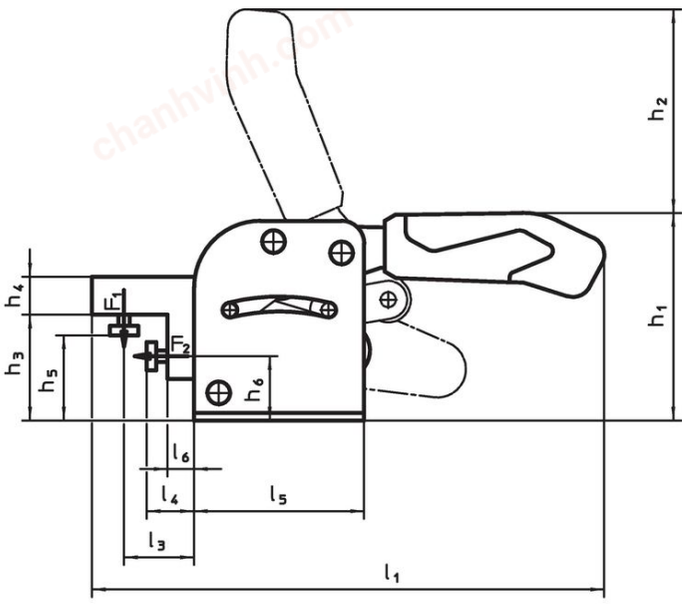

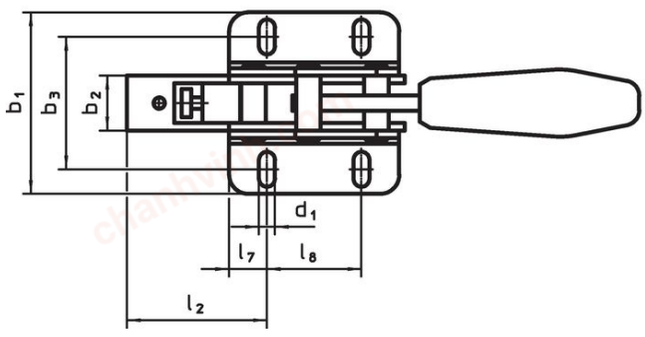

chanhvinh.com

Order information

Nominal size	Dimensions																			Holding force					Art. No.
	d_1	b_1	b_2	b_3	h_1	h_2	h_3	h_4	h_5 min.	h_5 max.	h_6	l_1	l_2	l_3	l_4 min.	l_4 max.	l_5	l_6	l_7	l_8	F_1	F_2	min.	max.		
	[mm]																				[kN]		[°C]			
Steel																										
2	5.5	53	17.0	34.5 – 39.5	74	62	36.0	12	25	32	22	150	33	15	5	10	55	0.5	7.5	40	1	1	-10	80	330.0 g	23330.4002
3	6.5	75	19.5	48.5 – 61.5	94	87	46.0	16	30	40	28	219	56	32	14	24	75	9.0	12.5	50	2	2	-10	80	714.0 g	23330.4003
4	8.5	96	29.0	60.0 – 80.0	110	106	55.5	20	40	50	34	270	74	37	20	30	90	14.0	20.0	50	3	3	-10	80	1.6 kg	23330.4004

Compliance

RoHS-compliant
Compliant with Directive 2011/65/EU [RoHS].

Does not contain SVHC substances
No SVHC substances with more than 0.1% w/w contained - SVHC list [REACH] as of 04.02.2026.

SCIP-code
N/A

Does not contain Proposition 65 substances
No Proposition 65 substances included.
https://www.P65Warnings.ca.gov/

Free from Conflict Minerals
This product does not contain any substances designated as "conflict minerals" such as tantalum, tin, gold or tungsten from the Democratic Republic of Congo or adjacent countries.

POP-compliant
Contains no persistent organic pollutants – Stockholm Convention [POP] as of September 2025.

PFAS-compliant
Contains no per- and polyfluoroalkyl substances (PFAS).

TSCA-compliant
Agent concentration in this product does not exceed the specified threshold.