chanhvinh.com

Vertical Toggle Clamps • with horizontal base

EH 23330.



Product Description

Due to their favourable power to movement ratio and their easy action the toggle clamps are versatile applicable for a wide rang of uses.
These toggle clamps can be used in the metal working industry when drilling, welding, bending, grinding, testing and fitting as well as in the wood and plastic industry in glueing, drilling, cutting and milling jigs.
The "toggle" principle of the toggle clamp allows a large and quick opening of the clamp. If unclamped the workpieces are completely cleared for unimpeded removal. The large power transmission results maximum clamping force by low hand force. The clamps are self-arresting they remain locked, resisting the force produced when machining components.
The toggle clamps are manufactured from high quality components and are designed for continuous use.
A oil resistant ergonomic 2-component handle, with increased grip area with soft surface for high ease of use.
The quickly adjustable clamping screws are provided with a loss prevention.

Material

Clamp
- Steel, zinc-plated by galvanization, passivated
- Stainless steel

Rivet
- Stainless steel
- Steel

Handle
- plastic

Clamping screw
- Steel, tempered, zinc-plated by galvanization
- Stainless Steel

Clamping cap
- Rubber, black

More information

References

Replacement clamping screws are available as accessories in the online shop.

Drawing

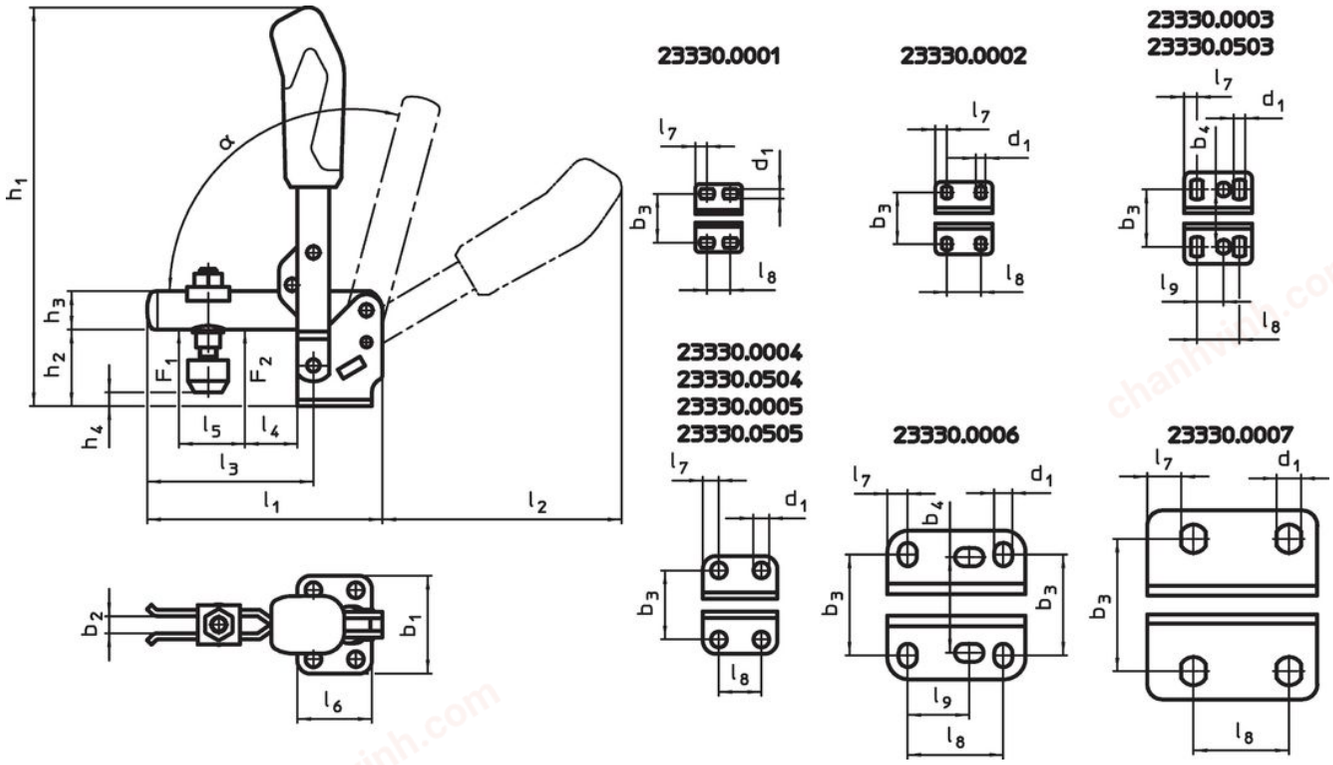

chanhvinh.com

Order information

Nominal size	Clamping screw	Dimensions																			Holding force		α				Art. No.
		d_1	b_1	b_2	b_3	b_4	h_1	h_2	h_3	h_4 min.	h_4 max.	l_1	l_2	l_3	l_4	l_5	l_6	l_7	l_8	l_9	F_1	F_2		min	max		
	[mm]	[mm]																			[kN]			[°C]			
Steel																											
1	M 4 x 25	4.5	32	4	23.0	–	81.0	18.0	8	-1.5	3.5	49	50	31.0	5.5	14	22	5.5	8.5 – 13.5	–	0.5	0.7	95°	-10	80	66.0 g	23330.0001
2	M 5 x 30	4.5	34	5	22.5 – 26.0	–	98.5	19.0	10	-4.0	2.0	61	59	39.0	6.0	18	27	5.5	16.0	–	0.6	1.1	95°	-10	80	114.0 g	23330.0002
3	M 6 x 35	5.5	43	6	23.0 – 31.0	27	129.0	23.0	12	-3.0	4.5	78	80	52.0	11.0	25	32	6.0	20.0	12.5	0.8	1.2	105°[1]	-10	80	192.0 g	23330.0003
4	M 8 x 45	7.5	46	8	32.5	–	186.0	33.0	18	2.0	11.0	112	112	79.0	19.0	37	35	7.5	20.0	–	1.2	2.5	105°[1]	-10	80	410.0 g	23330.0004
5	M 8 x 65	8.6	64	10	43.5 – 46.5	–	221.0	42.5	20	-6.0	22.5	141	130	101.0	16.0	54	53	13.0	32.0	–	1.7	3.0	105°[1]	-10	80	687.0 g	23330.0005
6	M12 x 80	8.5	70	14	45.0 – 50.0	45	281.0	55.8	25	-3.0	27.5	195	185	140.0	34.0	73	65	9.5	45.0	26.5 – 31.5	3.0	5.0	115°[1]	-10	80	1.5 kg	23330.0006
7	M12 x 110	13.0	100	14	37.5 – 72.5	–	333.0	81.0	30	-2.5	55.0	231	206	165.5	28.0	89	90	24.5	50.5	–	3.4	5.5	140°[1]	-10	80	2.4 kg	23330.0007
Stainless steel																											
3	M 6 x 35	5.5	43	6	23.0 – 31.0	27	129.0	23.0	12	-3.0	4.5	78	80	52.0	11.0	25	32	6.0	20.0	12.5	0.8	1.2	105°[1]	-10	80	195.0 g	23330.0503
4	M 8 x 45	7.5	46	8	32.5	–	186.0	33.0	18	2.0	11.0	112	112	79.0	19.0	37	35	7.5	20.0	–	1.2	2.5	105°[1]	-10	80	430.0 g	23330.0504
5	M 8 x 65	8.6	64	10	43.5 – 46.5	–	221.0	42.5	20	-6.0	22.5	141	130	101.0	16.0	54	53	13.0	32.0	–	1.7	3.0	105°[1]	-10	80	697.0 g	23330.0505

[1] The opening angle of the handle can be changed to 60° by pressing in a stop pin.

chanhvinh.com

Accessories

	Dimensions d_2 [mm]	[g]	Art. No.
Clamping screw (spare part of toggle clamp), Steel			
	**M 4 x 25**	6.2	23330.9001
	M 5 x 30	11.0	23330.9002
	M 6 x 35	16.0	23330.9003
	M 8 x 45	38.0	23330.9005
	M 8 x 65	57.0	23330.9006
	M12 x 80	147.0	23330.9007
	M12 x 110	170.0	23330.9008
Clamping screw (spare part of toggle clamp), Stainless Steel			
	**M 6 x 35**	16.0	23330.9503
	M 8 x 45	39.0	23330.9504
	M 8 x 65	61.0	23330.9505

chanhvinh.com

Application example

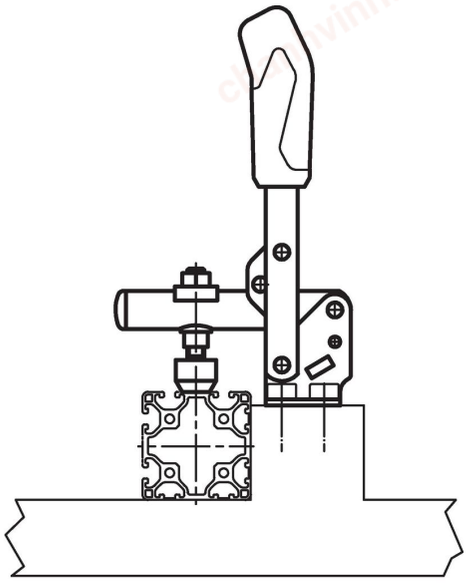

Compliance

For detailed compliance information please select the desired article number.