chanhvinh.com

Floating Clamps • combined clamping and locking M 12
EH 23320.



Product Description

The floating clamp is used to **clamp and support** additional clamping points on components.
The benefits of the floating clamp are:
- Avoids vibration during the processing
- Clamps ribs, beads and shackles to reinforce clamped components
- Distortion-free clamping of raw parts.

Material

Adjustable body
- Aluminium, red anodised

Body
- Case-hardened steel, nitrided, manganese phosphated and ground

Clamping jaws
- Case-hardened steel, nitrided, manganese phosphated

Assembly

1. Mount the floating clamp (M 12 connection thread) onto the device with a wrench (WS 46).
2. Adjust the height limit stop and the rotating area with the red sleeve and clamp with a set screw (3 x WS 2.5). When setting the height limit, consider tolerance of workpiece.

Operation

1. Push the floating clamp downwards.
2. Pivot the clamping jaws in as far as possible. The floating clamp contacts the bottom of the workpiece with a slight spring load.
3. Tighten the floating clamp with a hexagonal nut (WS 18) having a min. torque of 15 Nm and a maximum torque of 30 Nm.**In the clamping process, the workpiece is clamped and simultaneously supported.**
4. Releasing is done in reverse order.

More information

Notes

The thread bore must always be closed for safe functioning, e.g. set screw M 12 x 10. For specific clamping situations, the standard clamping jaws supplied can be exchanged or replaced (see catalogue drawing: screw ISO 4762 - M8 - 12.9, M max. = 43 Nm).

References

Additional flexible possibility of fitting with holder 23470.0250 or holding plate for down-hold clamps 23210.0740.

Accessories

As an accessory, we offer clamping jaws with an increased clamping range, refer to 23320.0050-.0058, as well as pivot jaws, refer to 23320.0148-.0156.

Further products

- Holding Plates, for down-hold clamps
- Floating Clamps, separate clamping and locking M 12
- Standard Clamping Jaws, for floating clamp M 12
- Clamping Jaws, for floating clamp M 12

chanhvinh.com

Drawing

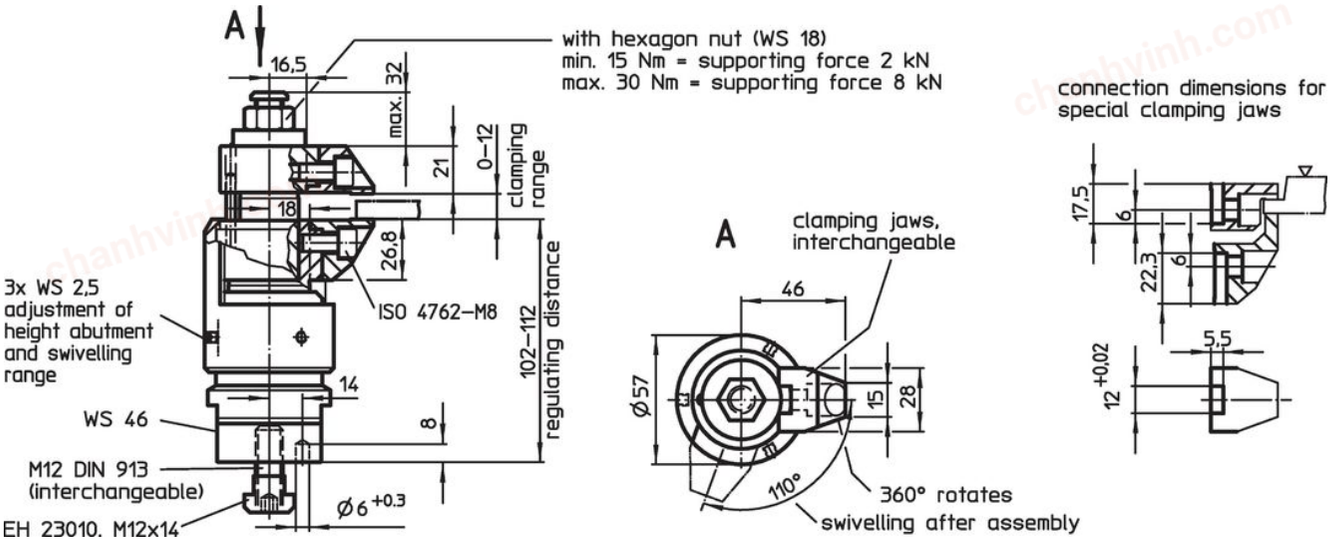

Order information

[kg]	Art. No.
2.1	23320.0012

Application example



chanhvinh.com

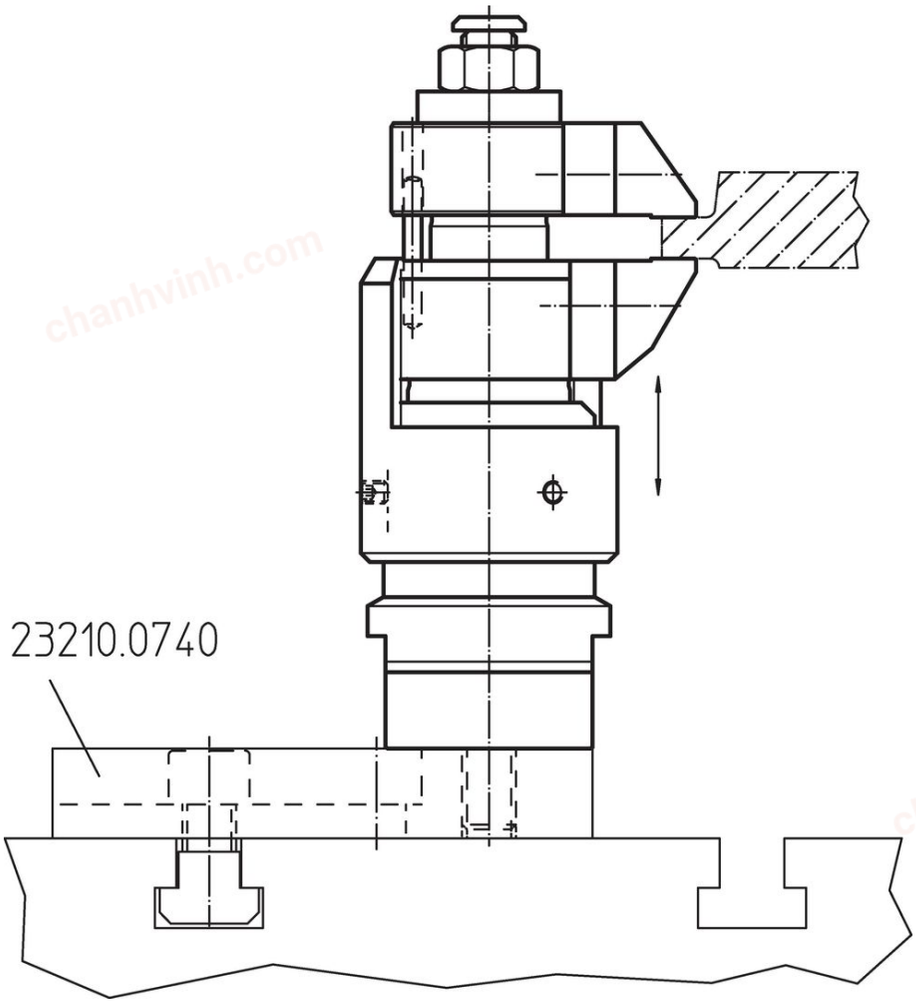

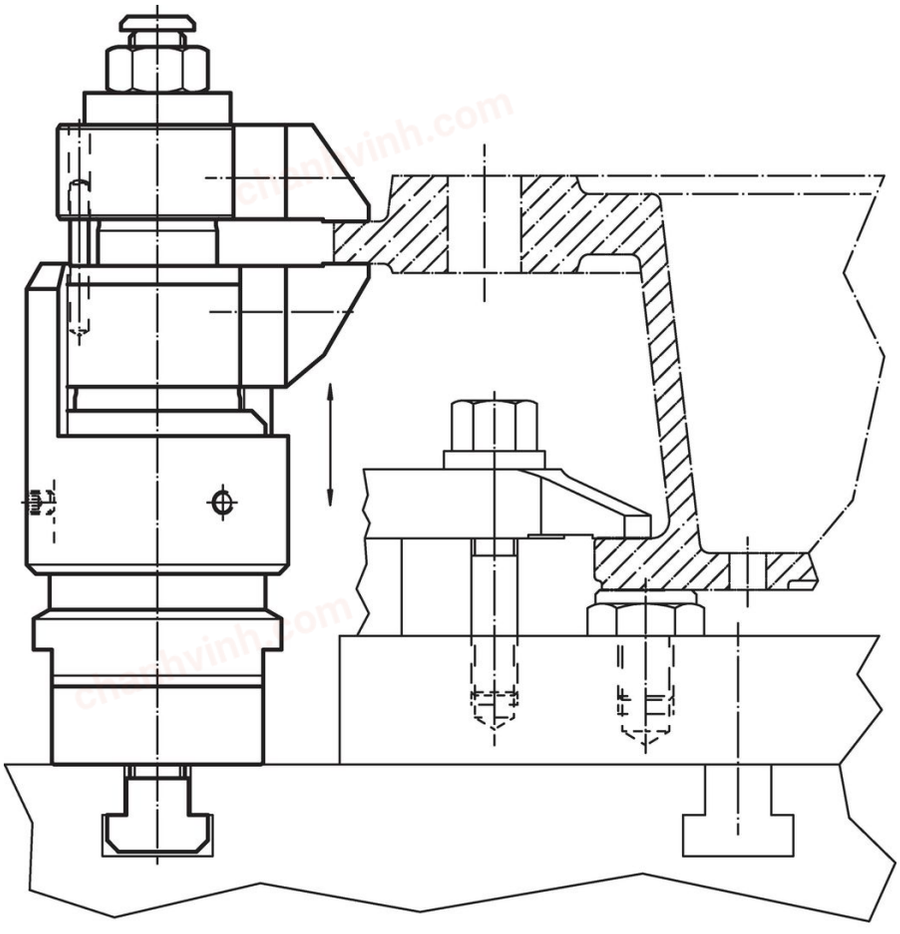

chanhvinh.com

Compliance

RoHS-compliant
Contains lead - compliant according to exceptions 6(a)-I / 6(b)-II / 6(c).

Contains SVHC substances >0,1% w/w
Contains lead - SVHC list [REACH] as of 04.02.2026.

SCIP-code
b5f83771-15d3-4224-ade2-70a4fb75737a

Contains Proposition 65 substances



Lead can lead to cancer, developmental disorders, and reproductive damage in men and to reproductive damage in women from exposure. Nickel can cause cancer from exposure.
https://www.P65Warnings.ca.gov/

Free from Conflict Minerals
This product does not contain any substances designated as "conflict minerals" such as tantalum, tin, gold or tungsten from the Democratic Republic of Congo or adjacent countries.

POP-compliant
Contains no persistent organic pollutants – Stockholm Convention [POP] as of September 2025.

PFAS-compliant
Contains no per- and polyfluoroalkyl substances (PFAS).

TSCA-compliant
Agent concentration in this product does not exceed the specified threshold.