chanhvinh.com

Down-Thrust Clamps • swivelling, size 25

EH 23310.



Product Description

Universal mechanical clamping element for fast and comfortable changing and clamping of workpieces by means of manually swivelling clamping claw.
The clamps have the following advantages:

- Rapid manual clamping by means of clamping screw, adjustable clamping lever or adjustable eccentric quick clamp.
- Easy and quick changing of the workpiece by swinging away the clamping claw to the left or right. The positioning ring 23310.0345 allows infinitely variable adjustment (only with variants art no. 23310.0027 - .0029).
- The use of positioning ring 23310.0345 allows a repeatable precise clamping. Here h_1 min. increases by at least 6 mm (stroke minus 6 mm).
- Compact design, thus little space taken-up for clamping.
- Easy adjustment even to large clamping heights due to the height adjusting cylinders.

As the force applied by the operator is not known for the versions with levers, the clamping force is given in the tables as a guide value. The average value was determined by tests.

Material

Clamp

- Case-hardened steel, case-hardened, blackened and ground

Tension lever

- Zinc die-cast, plastic coated, orange similar to RAL 2004, matt structure
- Zinc die-cast, plastic coated, black, similar to RAL 9005

Assembly

Down-thrust clamps can be attached in two ways:

1. in a T-slot, using a nut for T-slots DIN 508 (EH 23010.)
2. with the set screw directly in the mounting plate of, for example, a fixture

The cylinder must make contact over the whole surface.

More information

References

The clamping height can be increased with EH 23310. height adjusting cylinders and EH 1007. washers, and equally lowered by using clamping elements e.g. EH 22730.

Further products

- Positioning Rings, for down-thrust clamp
- Height Adjusting Cylinders
- Spacers

chanhvinh.com

Drawing

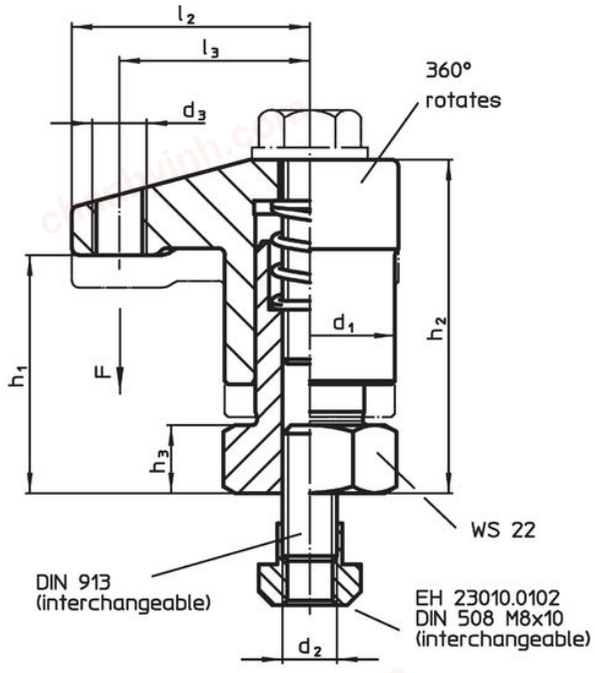

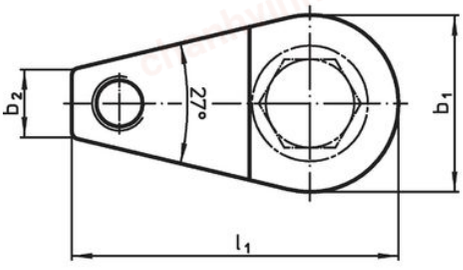

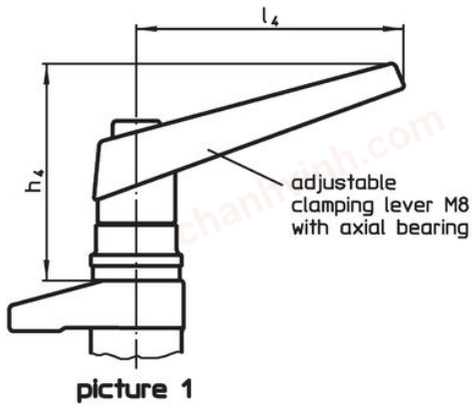

picture 1

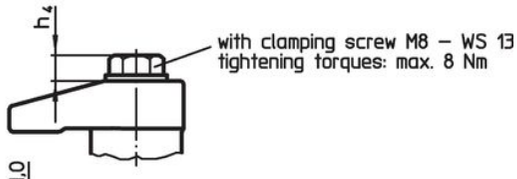

picture 2

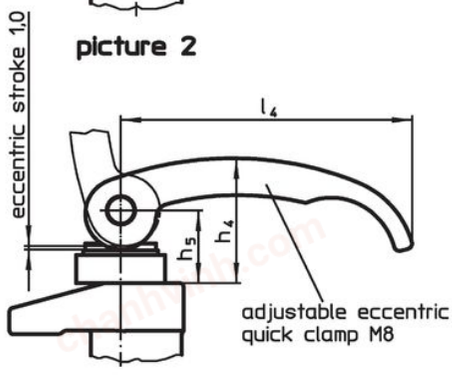

picture 3

Order information

Dimensions														Stroke	Clamping force	Tightening torque max.		Art. No.
d_1	b_1	b_2	d_2	d_3	h_1	h_2	h_3	h_4	h_5	l_1	l_2	l_3	l_4	[mm]	[kN]	[Nm]	[g]	
with adjustable clamping lever with axial bearing – picture 1																		
25	26	10	M8	M8	30 – 35	44 – 49	10	60.0	–	48	35	28	74	5	3[1)]	–	366	23310.0024
25	26	10	M8	M8	35 – 45	54 – 64	10	60.0	–	48	35	28	74	10	3[1)]	–	387	23310.0028
with clamping screw – picture 2																		
25	26	10	M8	M8	30 – 35	44 – 49	10	6.9	–	48	35	28	–	5	5	8	205	23310.0025
25	26	10	M8	M8	35 – 45	54 – 64	10	6.9	–	48	35	28	–	10	5	8	250	23310.0027
with eccentric quick clamp, adjustable – picture 3																		
25	26	10	M8	M8	30 – 35	44 – 49	10	35.0	20.5	48	35	28	82	5	2[1)]	–	331	23310.0026
25	26	10	M8	M8	35 – 45	54 – 64	10	35.0	20.5	48	35	28	82	10	2[1)]	–	380	23310.0029

[1)] Average value (with hand force) established in trials.

chanhvinh.com

Application example

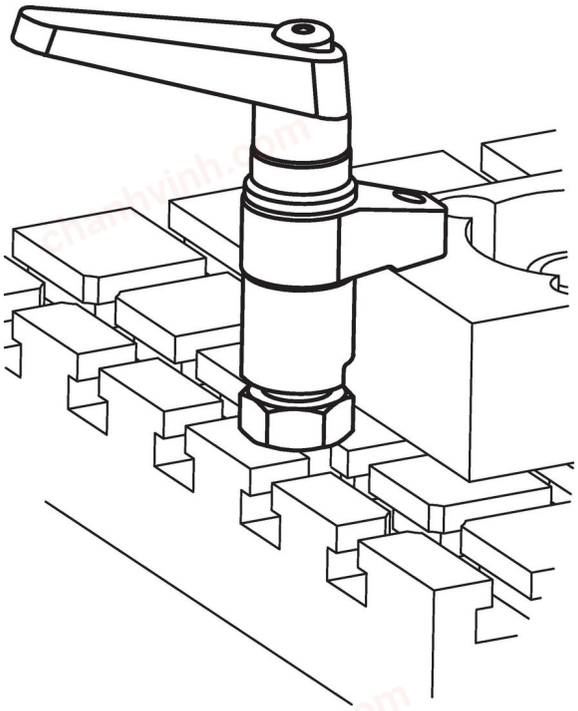

Compliance

For detailed compliance information please select the desired article number.

chanhvinh.com