chanhvinh.com

Down-Thrust Clamps • moveable, size 40
EH 23310.



Product Description

The moveable down-thrust clamps are used, amongst other things, when swivel movements are not possible because of the workpiece.
The clamps have the following advantages:
- Easy and rapid changing of workpieces by moving the clamping claws forwards or backwards.
- The clamping range in horizontal direction is between l_1 min. and l_1 max..
- To change the workpiece, the clamping claw can be pushed back from l_1 max. by dimension l_2.
- Rapid manual clamping by means of the clamping screw, the adjustable clamping lever, or the double eccentric tension lever.
- As with all down-thrust clamps, the clamping claw of this version can also be swivelled away to the left or right. The use of positioning ring 23310.0350 allows the clamping position to be fixed. Here h_1 min. increases by at least 7 mm (stroke minus 7 mm).
- Compact design, thus little space taken-up for clamping.
- Easy adjustment even to large clamping heights due to the height adjusting cylinders.

As the force applied by the operator is not known for the versions with levers, the clamping force is given in the tables as a guide value. The average value was determined by tests.

Material

Clamp
- Case-hardened steel, case-hardened, blackened and ground

Tension lever
- Zinc die-cast, plastic coated, orange similar to RAL 2004, matt structure
- Alloyed case-hardened steel, case-hardened, blackened

Grub Screw
- Steel, quality 12.9

T-nut
- Heat-treated steel, tempered, quality 10, blackened

Assembly

Down-thrust clamps can be attached in two ways:
1. in a T-slot, using a nut for T-slots DIN 508 (EH 23010.)
2. with the set screw directly in the mounting plate of, for example, a fixture

The cylinder must make contact over the whole surface.

Operation

1. Push clamping claw backwards.
2. Insert workpiece.
3. Push clamping claw forwards.
4. Adjust clamping position of clamping claw using the knurled screw.
5. Secure / lock the clamping position using the knurled nut.

More information

References

The clamping height can be increased by using height adjusting cylinders EH 23310. and disks EH 1107. and EH 1108. It can be reduced by employing clamping inserts, e.g. EH 22730.

Further products

- Positioning Rings, for down-thrust clamp
- Height Adjusting Cylinders
- Spacers
- Wrenches

chanhvinh.com

Drawing

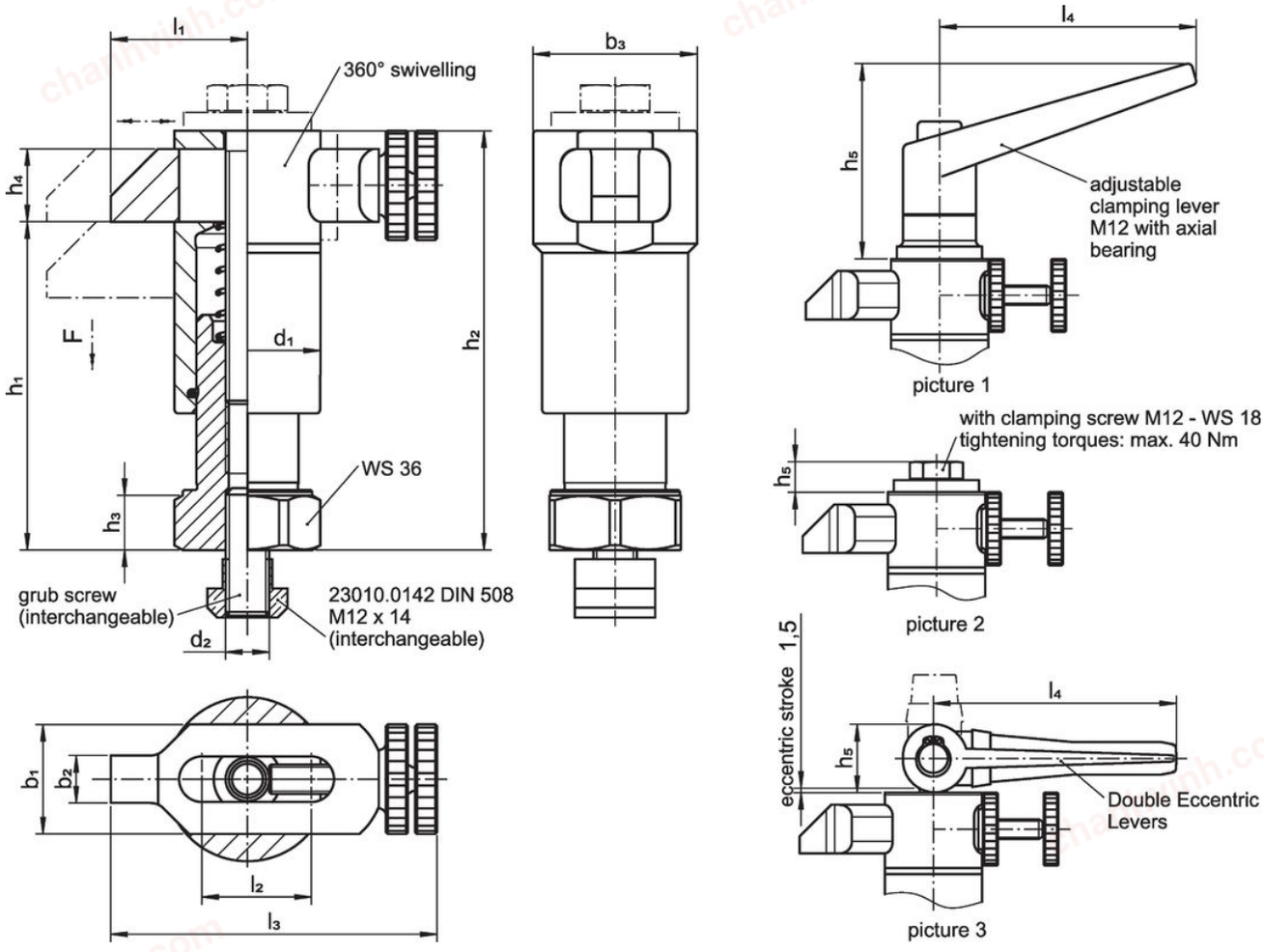

Order information

Dimensions [mm]														Stroke [mm]	Clamping force [kN]	Tightening torque max. [Nm]	[kg]	Art. No.
d_1	b_1	b_2	b_3	d_2	h_1	h_2	h_3	h_4	h_5	l_1	l_2	l_3	l_4					
with adjustable clamping lever with axial bearing – picture 1																		
40	30	13	45	M12	70 – 90	95 – 115	15	20	82	38 – 55	30	90 – 107	108	20	6[1)]	–	1.4	23310.0083
40	30	13	45	M12	88 – 118	113 – 143	15	20	82	38 – 55	30	90 – 107	108	30	6[1)]	–	1.6	23310.0086
with clamping screw – picture 2																		
40	30	13	45	M12	70 – 90	95 – 115	15	20	13	38 – 55	30	90 – 107	–	20	10	40	1.1	23310.0084
40	30	13	45	M12	88 – 118	113 – 143	15	20	13	38 – 55	30	90 – 107	–	30	10	40	1.3	23310.0087
with double eccentric levers – picture 3																		
40	30	13	45	M12	70 – 90	95 – 115	15	20	28	38 – 55	30	90 – 107	100	20	4[1)]	–	1.4	23310.0085
40	30	13	45	M12	88 – 118	113 – 143	15	20	28	38 – 55	30	90 – 107	100	30	4[1)]	–	1.6	23310.0088

[1)] Average value (with hand force) established in trials.

chanhvinh.com

Application example

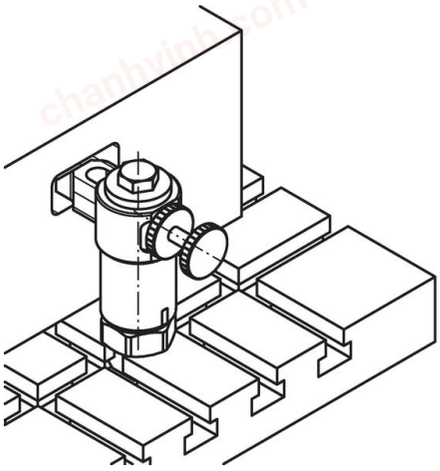

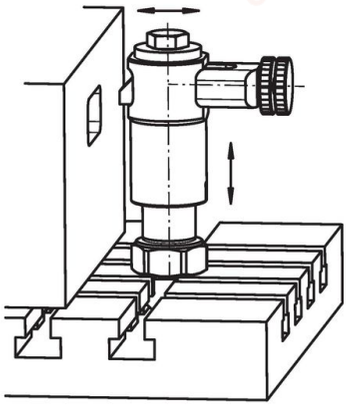

Compliance

For detailed compliance information please select the desired article number.