chanhvinh.com

Positioning Rings • for down-thrust clamp
EH 23310.



Product Description

After aligning, the clamp positioning ring is fitted on the spindle with the effect, that repeated clamping is always exactly on the same point. The positioning ring is adjustable 360° on the down-thrust clamp. After mounting, the clamping claw can swing 110° to the left or right (only for the swiveling versions).

Material

- Steel, blackened

Assembly

Before mounting the positioning ring, pull-off the clamping claw of down-thrust clamp.

Drawing

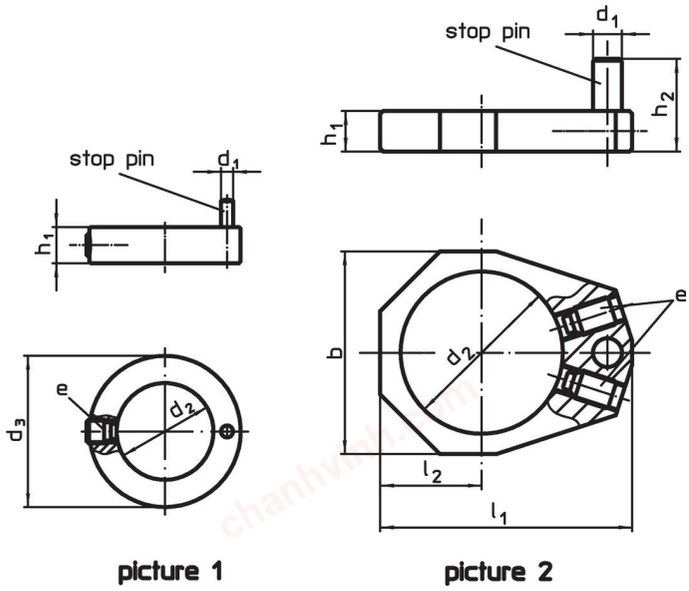

picture 1 picture 2

Order information

Dimensions [mm]									For down-thrust clamp	[g]	Art. No.
h_1	h_2	d_1	d_2	d_3	l_1	l_2	b	e			
for down-thrust clamps size 25 – picture 1											
6	10	2	16	25	–	–	–	22760.0040	23310.0027 - 23310.0029	13	23310.0345
for down-thrust clamps size 32 – picture 1											
6	10	3	20	32	–	–	–	22760.0042	23310.0040 - 23310.0045	22	23310.0348
for down-thrust clamp, size 40 – picture 2											
7	16	5	28	–	43.5	17.5	35	22760.0052	23310.0050-.0058/23310.0083-.0088	32	23310.0350
for down-thrust clamps size 60 – picture 2											
10	20	8	40	–	66.5	27.5	56	22760.0064	23310.0065, 23310.0067	149	23310.0360
for down-thrust clamp, size 82,5 – picture 2											
15	40	10	62	–	93.0	39.0	78	22760.0104	23310.0070	355	23310.0351

chanhvinh.com

Application example

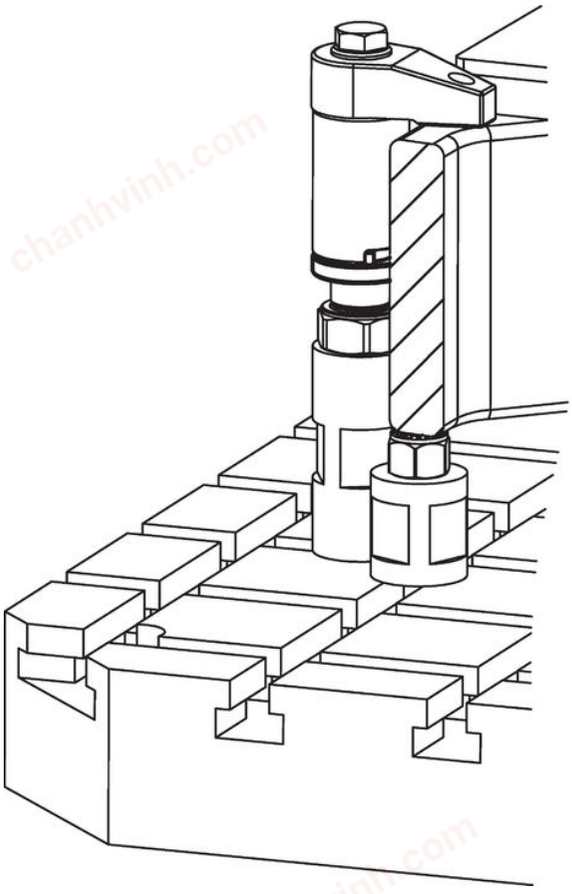

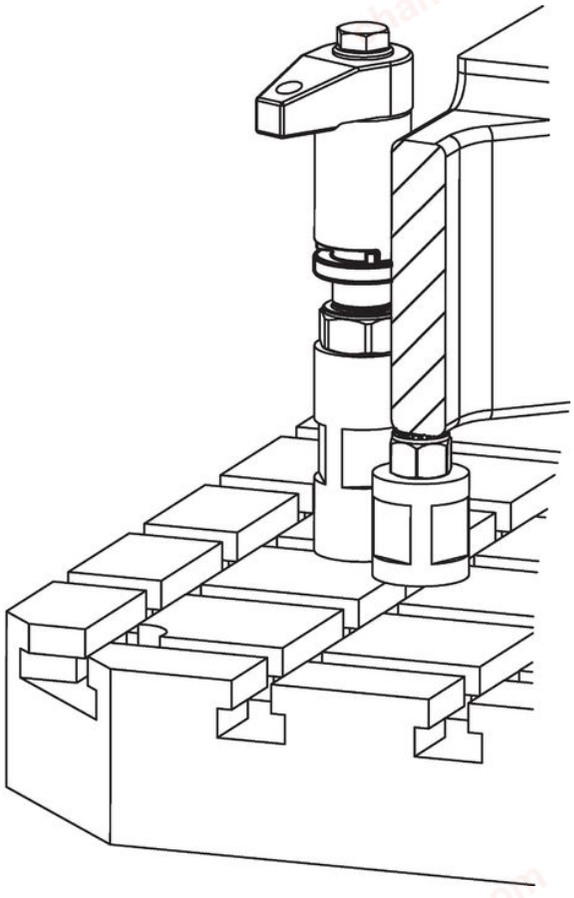

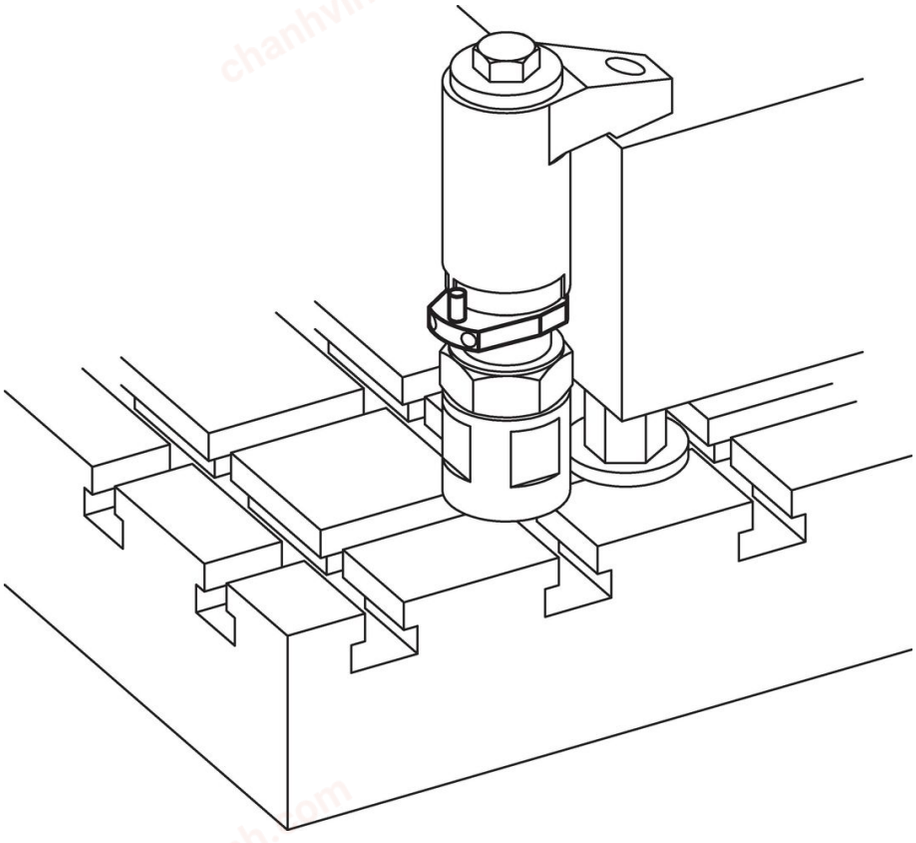

Compliance

For detailed compliance information please select the desired article number.