chanhvinh.com

Down-Thrust Clamps • swivelling, size 40
EH 23310.



Product Description

Universal mechanical clamping element for fast and comfortable changing and clamping of workpieces by means of manually swivelling clamping claw.
The clamps have the following advantages:
- Rapid manual clamping by means of clamping screw, adjustable clamping lever, or double eccentric lever.
- Easy and rapid changing of workpieces by swinging away the clamping claw to the left or right. The positioning ring 23310.0350 allows infinitely variable adjustment.
- The use of positioning ring 23310.0350 allows a repeatable precise clamping. Here h_1 min. increases by at least 7 mm (stroke minus 7 mm).
- Compact design, thus little space taken-up for clamping.
- Easy adjustment even to large clamping heights due to the height adjusting cylinders.

As the force applied by the operator is not known for the versions with levers, the clamping force is given in the tables as a guide value. The average value was determined by tests.

Material

Clamp
- Case-hardened steel, case-hardened, blackened and ground

Tension lever
- Zinc die-cast, plastic coated, orange similar to RAL 2004, matt structure
- Alloyed case-hardened steel, case-hardened, blackened

Assembly

Down-thrust clamps can be attached in two ways:
1. in a T-slot, using a nut for T-slots DIN 508 (EH 23010.)
2. with the set screw directly in the mounting plate of, for example, a fixture

The cylinder must make contact over the whole surface.
Exceeding of the clamping height is inhibited by the height limitation.

More information

References

The clamping height can be increased by using height adjusting cylinders EH 23310. and disks EH 1107. and EH 1108. It can be reduced by employing clamping inserts, e.g. EH 22730.

Further products

- Positioning Rings, for down-thrust clamp
- Height Adjusting Cylinders
- Spacers
- Wrenches

chanhvinh.com

Drawing

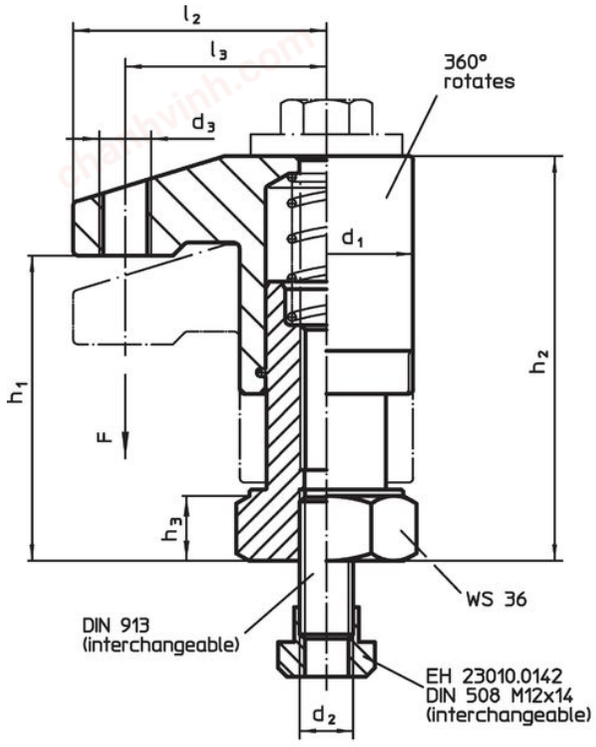

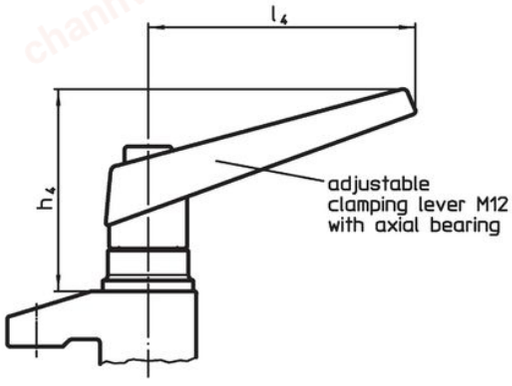

picture 1

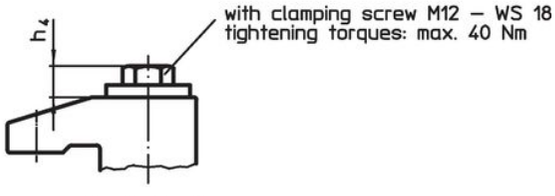

picture 2

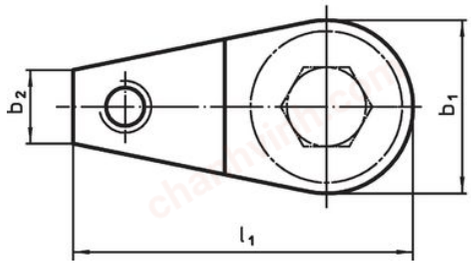

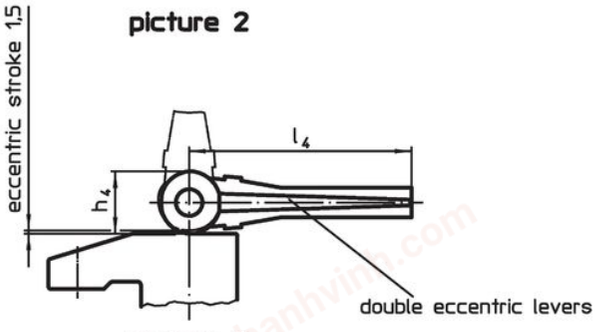

picture 3

Order information

Dimensions [mm]													Stroke [mm]	Clamping force [kN]	Tightening torque max. [Nm]		Art. No.
d_1	b_1	b_2	d_2	d_3	h_1	h_2	h_3	h_4	l_1	l_2	l_3	l_4					
with adjustable clamping lever with axial bearing – picture 1																	
40	40	17	M12	M12	50 – 70	73 – 93	15	82	75	55	43	108	20	6[1)]	–	1.2 kg	23310.0050
40	40	17	M12	M12	68 – 98	91 – 121	15	82	75	55	43	108	30	6[1)]	–	1.4 kg	23310.0053
40	40	17	M12	M12	95 – 135	118 – 158	22	82	75	55	43	108	40	6[1)]	–	1.6 kg	23310.0056
with clamping screw – picture 2																	
40	40	17	M12	M12	50 – 70	73 – 93	15	13	75	55	43	–	20	10	40	853.0 g	23310.0051
40	40	17	M12	M12	68 – 98	91 – 121	15	13	75	55	43	–	30	10	40	1.0 kg	23310.0054
40	40	17	M12	M12	95 – 135	118 – 158	22	13	75	55	43	–	40	10	40	1.3 kg	23310.0057
with double eccentric levers – picture 3																	
40	40	17	M12	M12	50 – 70	73 – 93	15	28	75	55	43	100	20	4[1)]	–	1.2 kg	23310.0052
40	40	17	M12	M12	68 – 98	91 – 121	15	28	75	55	43	100	30	4[1)]	–	1.4 kg	23310.0055
40	40	17	M12	M12	95 – 135	118 – 158	22	28	75	55	43	100	40	4[1)]	–	1.6 kg	23310.0058

[1)] Average value (with hand force) established in trials.

chanhvinh.com

Application example

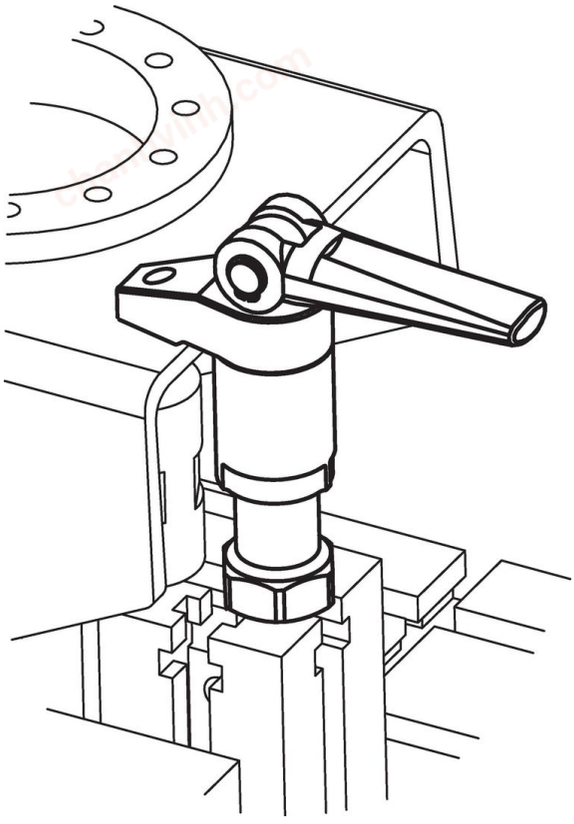

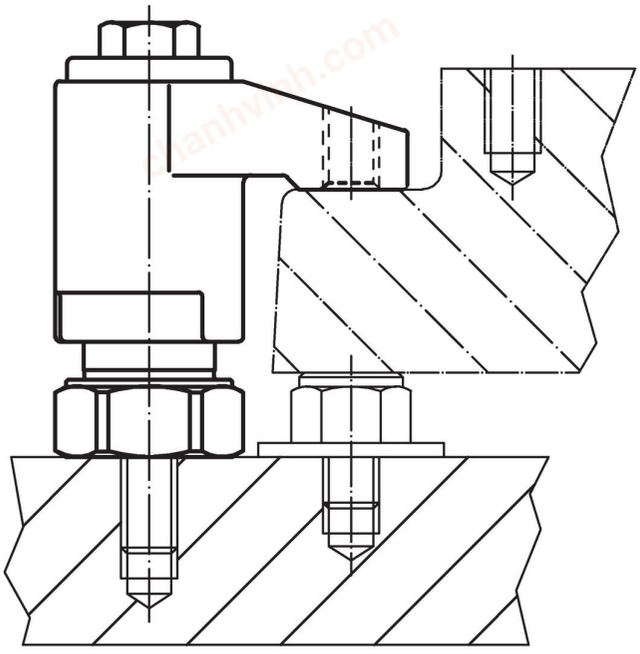

Compliance

For detailed compliance information please select the desired article number.