chanhvinh.com

Down-Thrust Clamps • swivelling, low construction, size 44
EH 23310.



Product Description

Universal mechanical clamping element for fast and comfortable changing and clamping of workpieces by means of manually swivelling clamping claw.
The clamps have the following advantages:
- Rapid manual clamping by means of clamping screw or double eccentric lever.
- Easy and rapid changing of workpieces by swinging away the clamping claw to the left or right.
- Low design, thus little space taken-up for clamping.
- Easy adjustment even to large clamping heights due to the height adjusting cylinders.

As the force applied by the operator is not known for the versions with levers, the clamping force is given in the tables as a guide value. The average value was determined by tests.

Material

- Case-hardened steel, case-hardened, blackened and ground

Assembly

Down-thrust clamps can be attached in two ways:
1. in a T-slot, using a nut for T-slots DIN 508 (EH 23010.)
2. with the set screw directly in the mounting plate of, for example, a fixture

The cylinder must make contact over the whole surface.

More information

References

The clamping height can be increased using height adjusting cylinders EH 23310. and with spacers EH 1107. and EH 1108.

Further products

- Height Adjusting Cylinders
- Spacers
- Wrenches

chanhvinh.com

Drawing

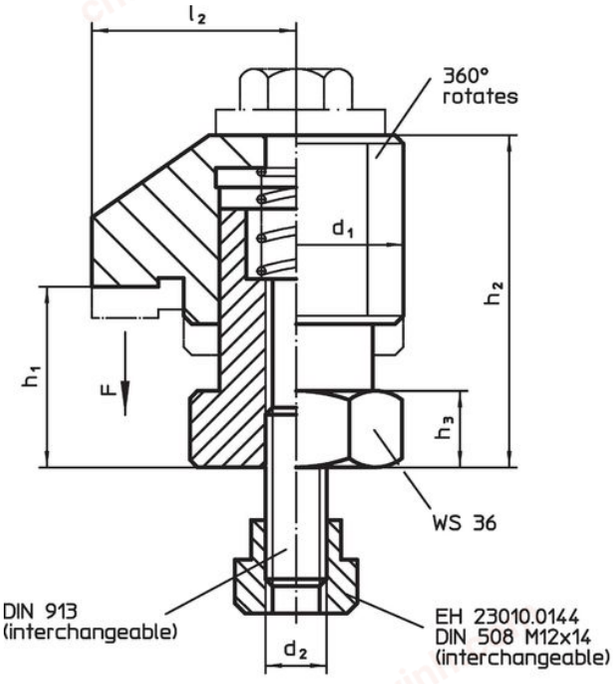

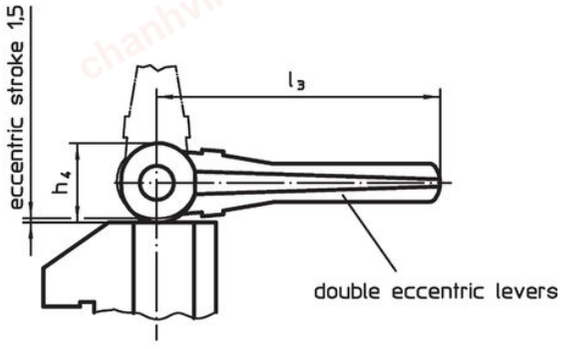

picture 1

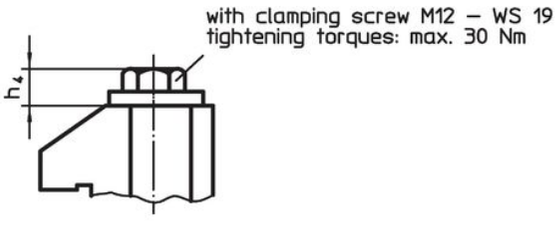

picture 2

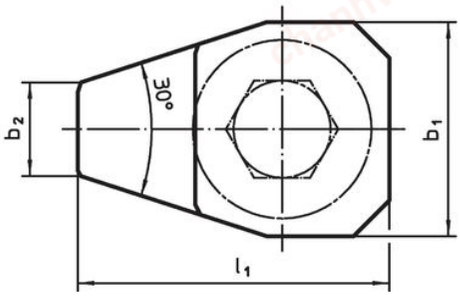

Order information

Dimensions											Stroke	Clamping force	Tightening torque max.		Art. No.
d_1	b_1	b_2	d_2	h_1	h_2	h_3	h_4	l_1	l_2	l_3					
[mm]											[mm]	[kN]	[Nm]		
with double eccentric levers – picture 1															
44	42	18	M12	25 – 30	54 – 59	15	28	61	40	100	5	4[1)]	–	1 kg	23310.0034
with clamping screw – picture 2															
44	42	18	M12	25 – 30	54 – 59	15	13	61	40	–	5	10	30	691 g	23310.0035

[1)] Average value (with hand force) established in trials.

chanhvinh.com

Application example

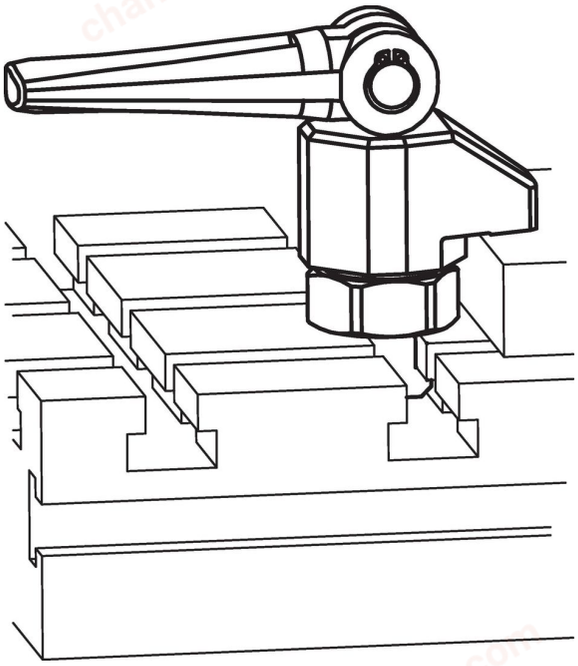

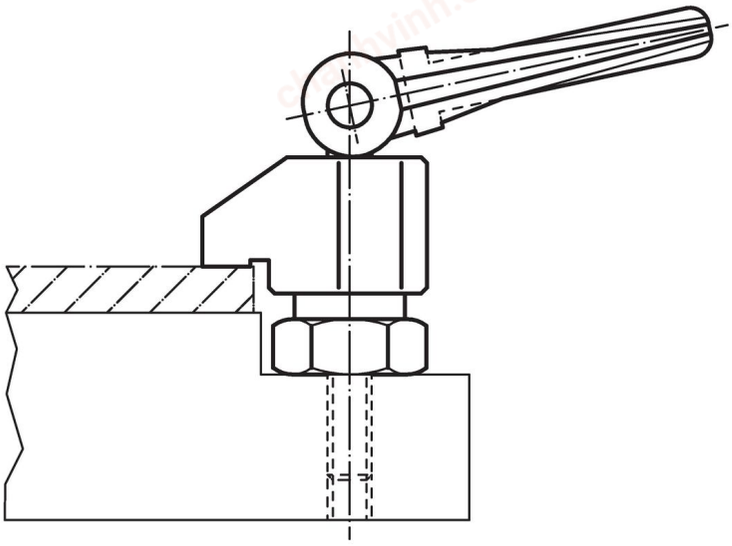

Compliance

For detailed compliance information please select the desired article number.