chanhvinh.com

Down-Thrust Clamps • swivelling, size 60

EH 23310.



Product Description

Universal mechanical clamping element for fast and comfortable changing and clamping of workpieces by means of manually swivelling clamping claw.
The clamps have the following advantages:

- Rapid manual clamping by means of clamping screw.
- Easy and rapid changing of workpieces by swinging away the clamping claw to the left or right. The positioning ring 23310.0360 allows infinitely variable adjustment.
- The use of positioning ring 23310.0360 allows a repeatable precise clamping. Here h_1 min. increases by at least 10 mm (stroke minus 10 mm).
- Compact design, thus little space taken-up for clamping.
- Easy adjustment even to large clamping heights due to the height adjusting cylinders.

Material

Clamp

- Case-hardened steel, case-hardened, blackened and ground

Assembly

Down-thrust clamps can be attached in two ways:

1. in a T-slot, using a nut for T-slots DIN 508 (EH 23010.)
2. with the set screw directly in the mounting plate of, for example, a fixture

The cylinder must make contact over the whole surface.

More information

References

The clamping height can be increased with height adjusting cylinders EH 23310. and with spacers EH 1617. and reduced with clamping inserts.

Further products

- Positioning Rings, for down-thrust clamp
- Wrenches
- Spacers

chanhvinh.com

Drawing

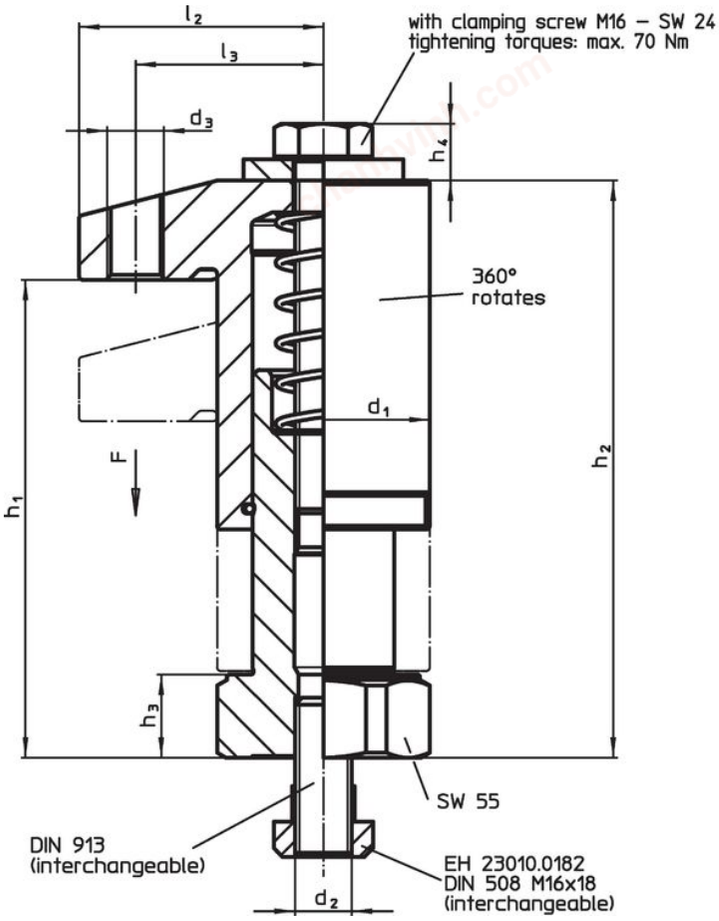

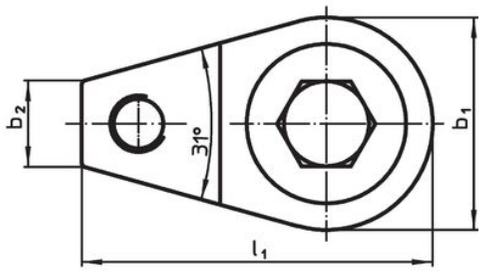

Order information

Dimensions											Stroke	Clamping force	Tightening torque max.		Art. No.
d_1	b_1	b_2	d_2	d_3	h_1	h_2	h_3	l_1	l_2	l_3	[mm]	[kN]	[Nm]	[kg]	
with clamping screw															
60	60	24	M16	M16	68 – 98	96 – 126	17	99	69	53	30	15	70	2.6	23310.0065
60	60	24	M16	M16	95 – 135	123 – 163	24	99	69	53	40	15	70	3.2	23310.0067

chanhvinh.com

Application example

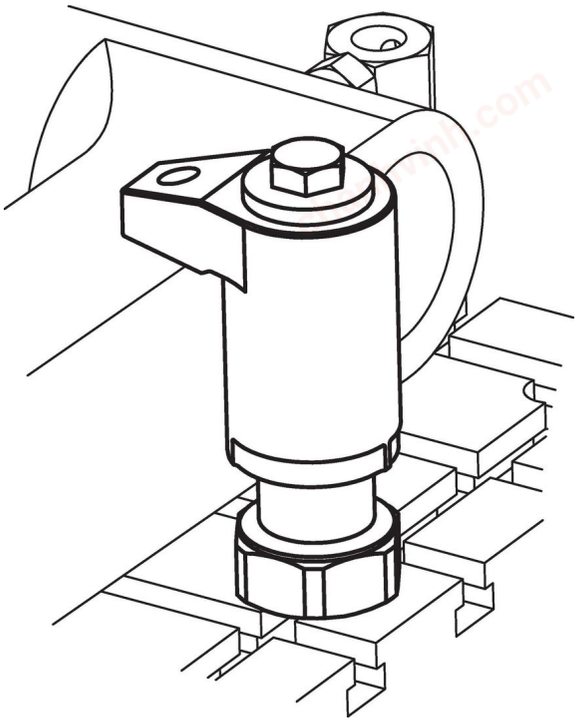

Compliance

RoHS-compliant
Contains lead – Compliant with Exemption 6(a)-I.

Contains SVHC substances >0,1% w/w
Contains lead - SVHC list [REACH] as of 04.02.2026.

SCIP-code
N/A

Contains Proposition 65 substances

⚠

Lead can lead to cancer, developmental disorders, and reproductive damage in men and to reproductive damage in women from exposure. Nickel can cause cancer from exposure.
https://www.P65Warnings.ca.gov/

Free from Conflict Minerals
This product does not contain any substances designated as "conflict minerals" such as tantalum, tin, gold or tungsten from the Democratic Republic of Congo or adjacent countries.

POP-compliant
Contains no persistent organic pollutants – Stockholm Convention [POP] as of September 2025.

PFAS-compliant
Contains no per- and polyfluoroalkyl substances (PFAS).

TSCA-compliant
Agent concentration in this product does not exceed the specified threshold.