chanhvinh.com

Stops

EH 23281.



Product Description

With the stop a flexible stop for a workpiece can be realised.
Together with a grub screw (e.g. EH 22540.), a workpiece can be mounted and aligned.
The grub screw should be secured in position with a hexagon nut.
Suitable for clamping devices M 20 - M 24.

Material

- Steel, blackened

Drawing

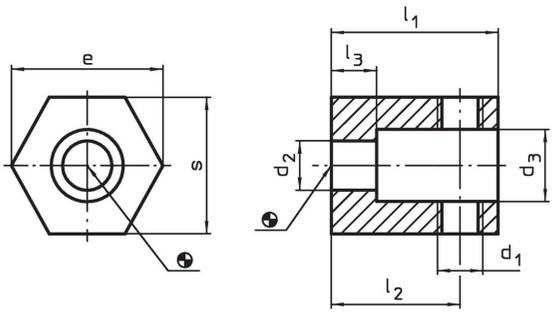

Order information

Dimensions [mm]									Art. No.
d_1	d_2	d_3	l_1	l_2	l_3	s	e	[kg]	
M20	26	38	85	60	20	65	70	1.7	23281.0024

Application example

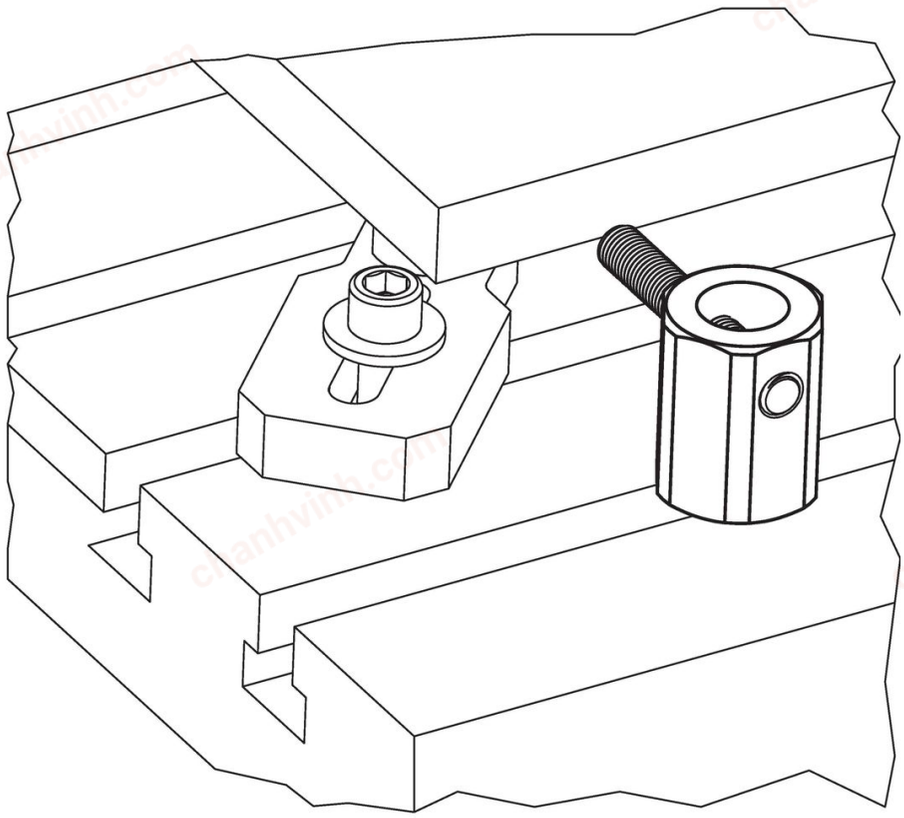

chanhvinh.com

Compliance

RoHS-compliant
Compliant with Directive 2011/65/EU [RoHS].

Does not contain SVHC substances
No SVHC substances with more than 0.1% w/w contained - SVHC list [REACH] as of 04.02.2026.

SCIP-code
N/A

Contains Proposition 65 substances


Nickel can cause cancer from exposure.
https://www.P65Warnings.ca.gov/

Free from Conflict Minerals
This product does not contain any substances designated as "conflict minerals" such as tantalum, tin, gold or tungsten from the Democratic Republic of Congo or adjacent countries.

POP-compliant
Contains no persistent organic pollutants – Stockholm Convention [POP] as of September 2025.

PFAS-compliant
Contains no per- and polyfluoroalkyl substances (PFAS).

TSCA-compliant
Agent concentration in this product does not exceed the specified threshold.