chanhvinh.com

Eccentric Clamping Clamps • with slot tenon
EH 23270.



Product Description

The eccentric clamping clamps can be used for quick and easy workpiece clamping directly on the machine table or a base plate with T-slots.
These eccentric clamping clamps with slot tenon are locked in a T-slot, for example on the machine table, with a thrust screw. Clamping takes place via the clamping screw with eccentric head. The brass basic element ensures gentle and secure clamping.
The eccentric clamping clamps with slot tenon have the following characteristics:
- Brass base element for material-friendly clamping
- Quick clamping thanks to clamping screw with eccentric head
- High clamping force is achieved
- Low design enables the machining of flat workpieces
- The compact dimensions enable space-saving multiple clamping

Material

Eccentric screw
- Steel

Grub Screw
- Steel, blackened

Body
- Brass

Slot tenon
- Steel, hardened, blackened

More information

Notes

The head of the eccentric screw can slightly protrude from the body (h_1).

Drawing

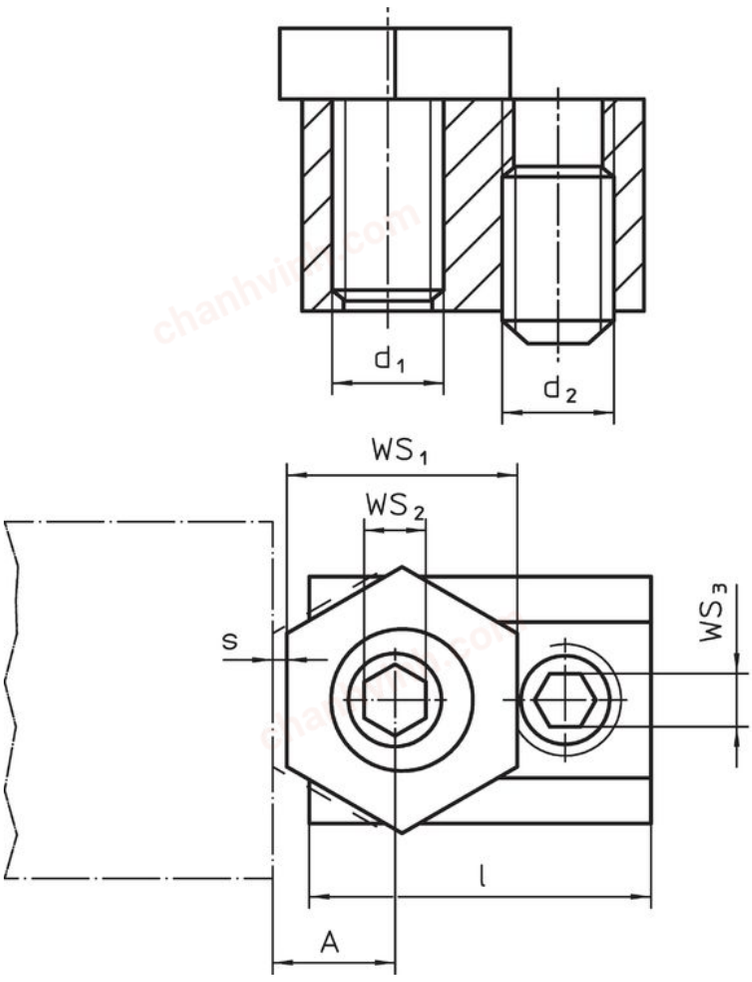

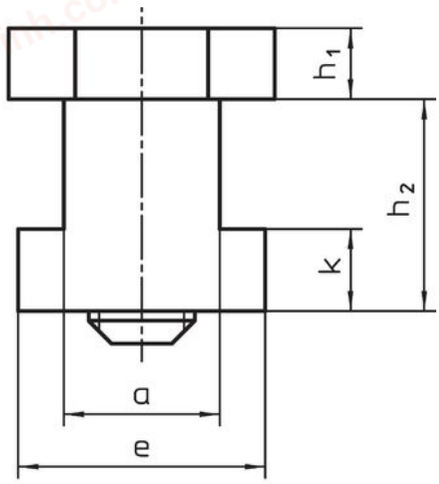

chanhvinh.com

Order information

T-slot size	Dimensions									A	WS			Clamping force max.	Tightening torque WS_2 max.	Tightening torque WS_3 max.		Art. No.
	d_1	d_2	a	e	h_1	h_2	k	s	l		WS_1	WS_2	WS_3					
[mm]	[mm]									[mm]	[mm]			[kN]	[Nm]	[Nm]	[g]	
10	**M 6**	M 6	9.8	14.3	4.8	14.3	4.4	1.0	23.2	7.8	16.0	4	3	3.4	10	8	35	23270.0410
14	**M10**	M10	13.7	22.1	6.4	22.1	8.1	1.3	30.5	10.2	20.6	7	5	7.0	26	35	101	23270.0414
18	**M12**	M12	17.7	28.5	9.5	28.5	10.5	2.5	34.7	12.7	25.4	8	6	9.0	75	55	190	23270.0418

Application example

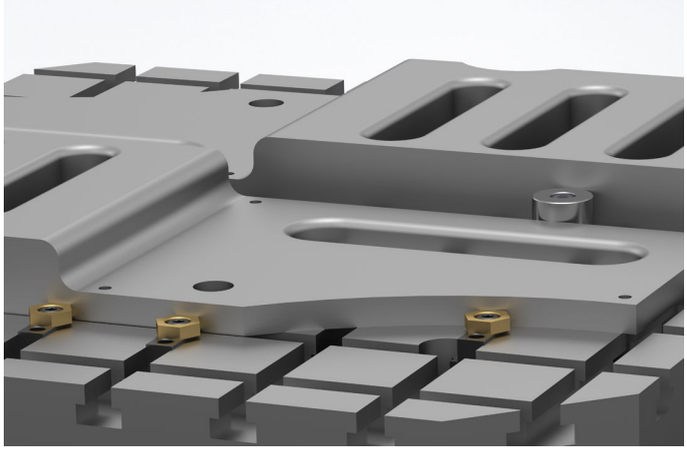

Compliance

RoHS-compliant
Compliant with Directive 2011/65/EU [RoHS].

Does not contain SVHC substances
No SVHC substances with more than 0.1% w/w contained - SVHC list [REACH] as of 04.02.2026.

SCIP-code
N/A

Does not contain Proposition 65 substances
No Proposition 65 substances included.
https://www.P65Warnings.ca.gov/

Free from Conflict Minerals
This product does not contain any substances designated as "conflict minerals" such as tantalum, tin, gold or tungsten from the Democratic Republic of Congo or adjacent countries.

POP-compliant
Contains no persistent organic pollutants – Stockholm Convention [POP] as of September 2025.

PFAS-compliant
Contains no per- and polyfluoroalkyl substances (PFAS).

TSCA-compliant
Agent concentration in this product does not exceed the specified threshold.