chanhvinh.com

Eccentric Clamping Washers

EH 23270.



Product Description

The eccentric clamping washers are especially suitable for the clamping of raw parts, e.g. cut-off portions, cast iron parts and forgings.

Material

Eccentric screw
- Steel

Body
- Steel, case-hardened

More information

Notes

The head of the eccentric screw can slightly protrude from the body (h_1).

Drawing

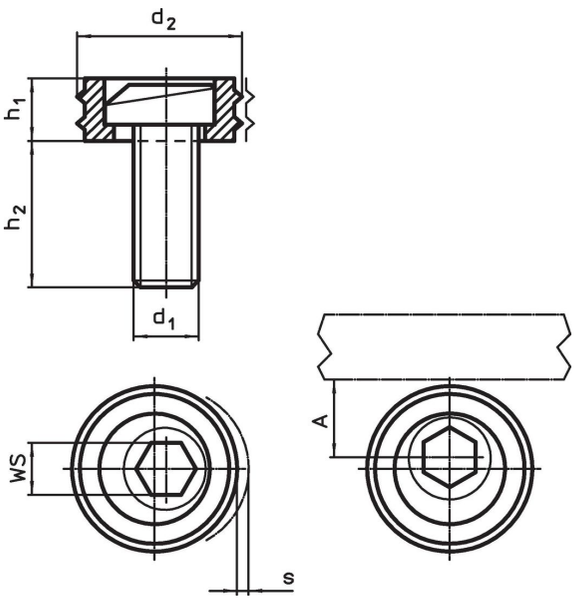

Order information

Dimensions					A	WS	Clamping force max.	Tightening torque max.		Art. No.
d_1	d_2	h_1	h_2	s						
[mm]					[mm]	[mm]	[kN]	[Nm]	[g]	
M10	20.6	6.4	16.0	1.6	10.3	7	9.0	26	23	23270.0210
M12	25.4	9.6	22.5	2.0	12.7	8	17.8	88	41	23270.0212
M16	30.1	12.7	26.8	2.5	15.0	12	26.7	135	92	23270.0216

Application example

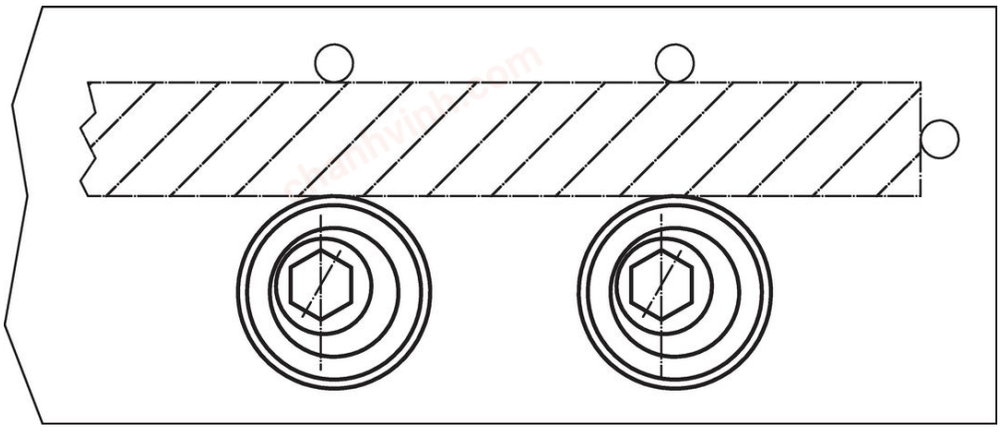

chanhvinh.com

Compliance

RoHS-compliant
Compliant with Directive 2011/65/EU [RoHS].

Does not contain SVHC substances
No SVHC substances with more than 0.1% w/w contained - SVHC list [REACH] as of 04.02.2026.

SCIP-code
N/A

Does not contain Proposition 65 substances
No Proposition 65 substances included.
https://www.P65Warnings.ca.gov/

Free from Conflict Minerals
This product does not contain any substances designated as "conflict minerals" such as tantalum, tin, gold or tungsten from the Democratic Republic of Congo or adjacent countries.

POP-compliant
Contains no persistent organic pollutants – Stockholm Convention [POP] as of September 2025.

PFAS-compliant
Contains no per- and polyfluoroalkyl substances (PFAS).

TSCA-compliant
Agent concentration in this product does not exceed the specified threshold.