chanhvinh.com

Coverings • for taper clamping units

EH 23250.



Product Description

Protects against damage from scales of wood and dirt.

Material

- Steel

Assembly

The cover is mounted under the taper clamping unit.

Drawing

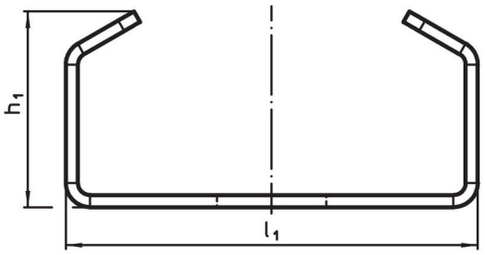

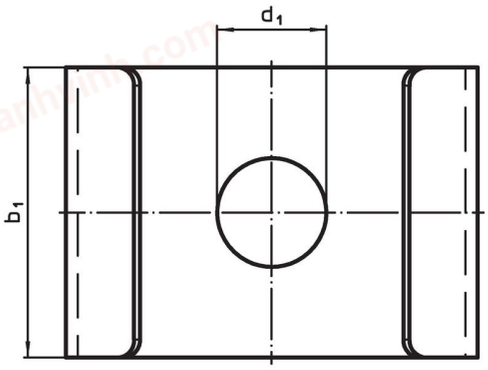

Order information

d_1	For screw	Dimensions b_1 [mm]	h_1	l_1	for taper clamping units	[g]	Art. No.
9	**M 8**	24	16.2	34	23250.0008/.0048/.0158	12	23250.0408
13	**M12**	38	22.1	44	23250.0012/.0052/.0142/.0162	26	23250.0412

Application example

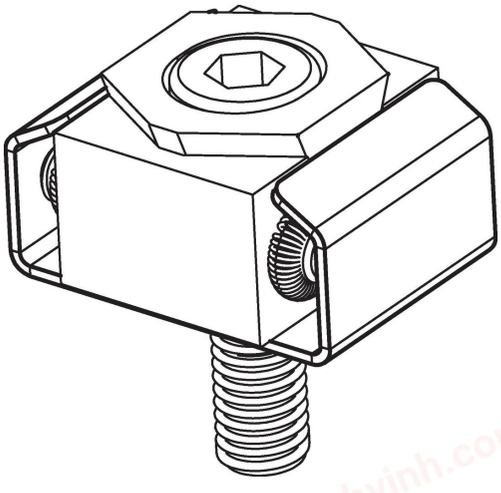

chanhvinh.com

Compliance

RoHS-compliant
Compliant with Directive 2011/65/EU [RoHS].

Does not contain SVHC substances
No SVHC substances with more than 0.1% w/w contained - SVHC list [REACH] as of 04.02.2026.

SCIP-code
N/A

Does not contain Proposition 65 substances
No Proposition 65 substances included.
https://www.P65Warnings.ca.gov/

Free from Conflict Minerals
This product does not contain any substances designated as "conflict minerals" such as tantalum, tin, gold or tungsten from the Democratic Republic of Congo or adjacent countries.

POP-compliant
Contains no persistent organic pollutants – Stockholm Convention [POP] as of September 2025.

PFAS-compliant
Contains no per- and polyfluoroalkyl substances (PFAS).

TSCA-compliant
Agent concentration in this product does not exceed the specified threshold.