chanhvinh.com

Taper Clamping Units

EH 23250.



Product Description

Taper clamping units are particularly suitable for horizontal and vertical multiple clampings. The taper clamps are compact in build and therefore enable clamping without geometric interference.

Material

Body
- Tool steel, hardened, bright

Screw
- Heat-treated steel, tempered, quality 12.9

Spring
- Spring steel wire
- NBR (O-Ring)

Clamping jaws
- Tool steel, hardened, blackened and ground

Assembly

Can be mounted in a threaded hole or with T-nuts for horizontal or vertical multiple clamping.

Operation

Inserting the socket head screw moves the two clamping chucks outwards and presses the workpieces against a stop. Using the double taper, an additional vertical clamping force will be achieved. Stroke of taper clamping units with M 5 = ±0,5, M 8 = ±0,5, M 12 = ±1 and M 16 = ±1,5. Can be mounted in a threaded hole or with T-nuts for horizontal or vertical multiple clamping.

More information

References

For further taper clamping units, refer to section "Multiple Clamping Systems"

Accessories

Nuts for T-Slots (EH 23010.) have to be purchased separately.

Further products

- Nuts for T-Slots, DIN 508
- Coverings, for taper clamping units
- Taper Clamping Units, plain / ribbed, M8
- Taper Clamping Units, plain / ribbed, M12
- Taper Clamping Units, with screw fastened thread, M12

Drawing

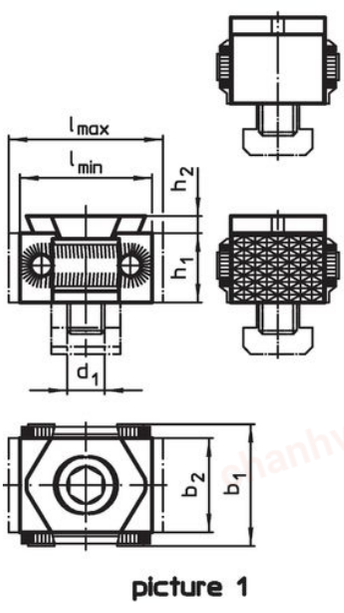

picture 1

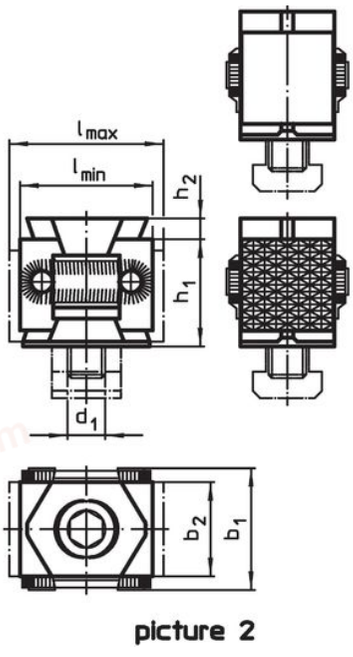

picture 2

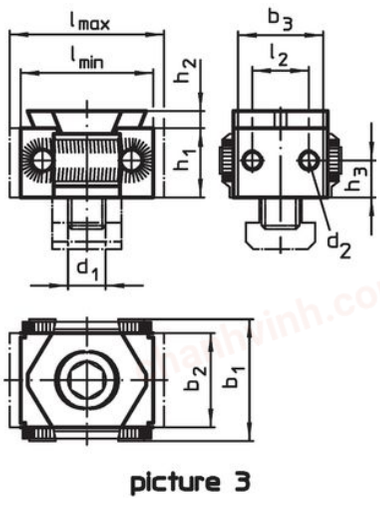

picture 3

chanhvinh.com

Order information

Dimensions										Clamping force max.	Tightening torque max.		Art. No.
d_1	l	l_2	b_1	b_2	b_3	d_2	h_1	h_2	h_3	[kN]	[Nm]	[g]	
[mm]													
single taper, ribbed clamping jaw, two-sided – picture 1													
M 8	27 – 31	–	29	21	–	–	15	2.5	–	20	43	72	23250.0008
M12	42 – 49	–	41	30	–	–	22	4.0	–	30	85	231	23250.0012
M16	57 – 65	–	56	42	–	–	29	5.0	–	50	210	578	23250.0016
single taper, flat clamping jaw, two-sided – picture 1													
M 5	20 – 25	–	22	15	–	–	11	4.2	–	7	10	33	23250.0065[1)]
M 8	27 – 31	–	29	21	–	–	15	2.5	–	20	43	73	23250.0048
M12	42 – 49	–	41	30	–	–	22	4.0	–	30	85	234	23250.0052
M16	57 – 64	–	56	42	–	–	29	5.0	–	50	210	577	23250.0056
double taper, ribbed clamping jaw, two-sided – picture 2													
M12	42 – 49	–	41	30	–	–	36	5.0	–	50	85	350	23250.0112
M16	58 – 66	–	56	42	–	–	50	5.0	–	80	210	906	23250.0116
double taper, flat clamping jaw, two-sided – picture 2													
M12	41 – 48	–	41	30	–	–	36	5.0	–	50	85	343	23250.0142
M16	58 – 66	–	56	42	–	–	50	5.0	–	80	210	895	23250.0146
single taper, clamping jaw with screw-fastened thread, two-sided – picture 3													
M 8	33 – 37	12	29	21	–	M5	15	2.5	7.5	20	43	84	23250.0158
M12	46 – 53	18	41	30	28	M5	22	4.0	11.0	30	85	247	23250.0162
M16	61 – 70	26	56	42	40	M5	29	5.0	14.5	50	210	618	23250.0166

[1)] Taper surfaces not ground, spring: O-ring (NBR)

Application example

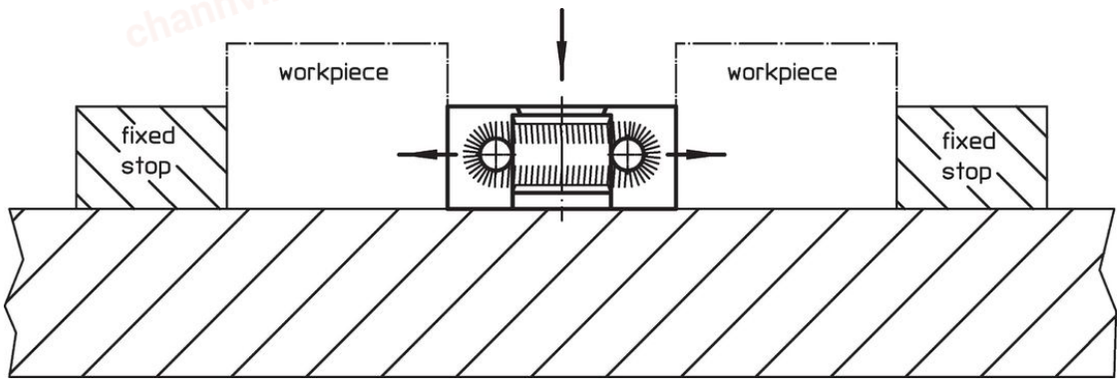

chanhvinh.com

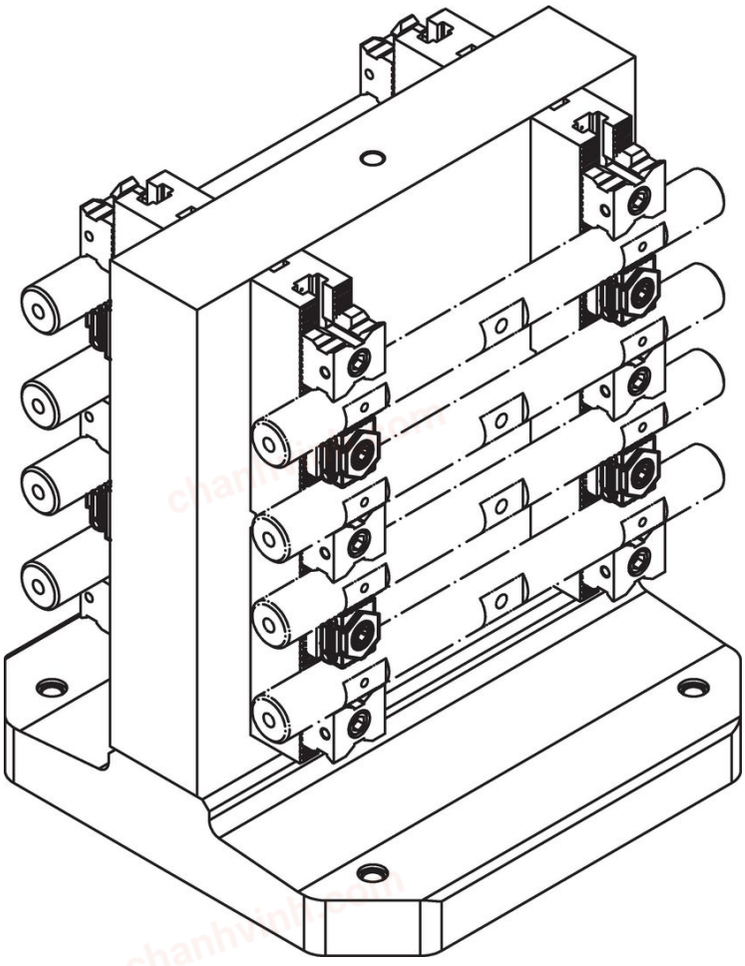

Compliance

RoHS-compliant
Compliant with Directive 2011/65/EU [RoHS].

Does not contain SVHC substances
No SVHC substances with more than 0.1% w/w contained - SVHC list [REACH] as of 04.02.2026.

SCIP-code
N/A

Does not contain Proposition 65 substances
No Proposition 65 substances included.
https://www.P65Warnings.ca.gov/

Free from Conflict Minerals
This product does not contain any substances designated as "conflict minerals" such as tantalum, tin, gold or tungsten from the Democratic Republic of Congo or adjacent countries.

POP-compliant
Contains no persistent organic pollutants – Stockholm Convention [POP] as of September 2025.

PFAS-compliant
Contains no per- and polyfluoroalkyl substances (PFAS).

TSCA-compliant
Agent concentration in this product does not exceed the specified threshold.