chanhvinh.com

Supporting Elements

EH 23220.



Product Description

The support element is used to **support** overdetermined clamping points on components.
The benefits of the support element are:

- Support for unstable components
- Eliminates tool vibration during machining
- Supports ribs, beads and shackles, for reinforcement of clamped components
- Distortion-free support of raw parts
- Easy handling

Material

Housing

- Aluminium, red anodised

Body

- Case-hardened steel, nitrided, manganese phosphated and ground

Assembly

Fix the support element (2 x M 6 thread) onto the device. Pay attention to the operator's side!
Alternative: Dismantle the M 12 x 10 threaded pin and replace it by an M 12 x 30 threaded pin and assemble the support element with a wrench (WS 21), e.g. for T-slot mounting (no defined operator's side ensured). Threaded pin M 12 x 30 and T-nut DIN 508 M 12 x 14, quality 10, are part of the standard supply volume.
Lowering of the support element by 16 mm is possible.

Operation

1. By turning the clamping cam (WS 6 internal hexagon) on the outer surface of the red protective sleeve, the support pin contacts the workpiece with a slight spring load.
2. By turning on (15 Nm) as far as possible (lock), total of 180°, the clamping mechanism locks the support pin without moving. The support element has been placed onto the workpiece and locked.
3. If turned in the opposite direction (unlock), the clamping is released. If turned back as far as possible, i.e. total of 180° the support pin moves to the end position.

More information

Notes

For safe functioning, the thread bore M 12 must always be closed.

References

Additional flexible possibility of fitting with holding plate 23210.0740.
In the M 8 threaded pin on the support bolt various seating pins (EH 22...) can be mounted. Custom-made extensions can also be fitted.
The clamping height can be increased using height adjusting cylinders EH 23310. and with spacers EH 1107. and EH 1108.

Further products

- Holding Plates, for down-hold clamps
- Height Adjusting Cylinders
- Spacers

chanhvinh.com

Drawing

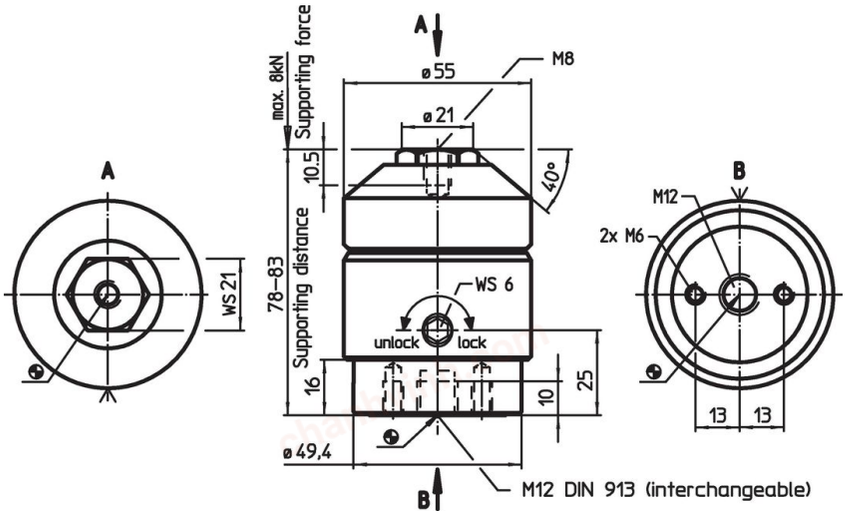

Order information

[kg]	Art. No.
1.1	23220.0400

Application example



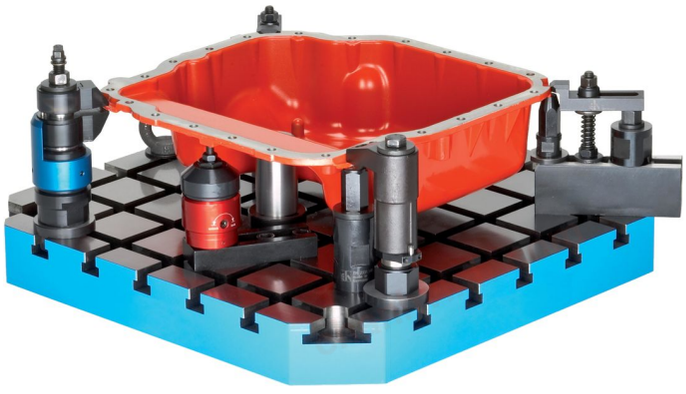



chanhvinh.com

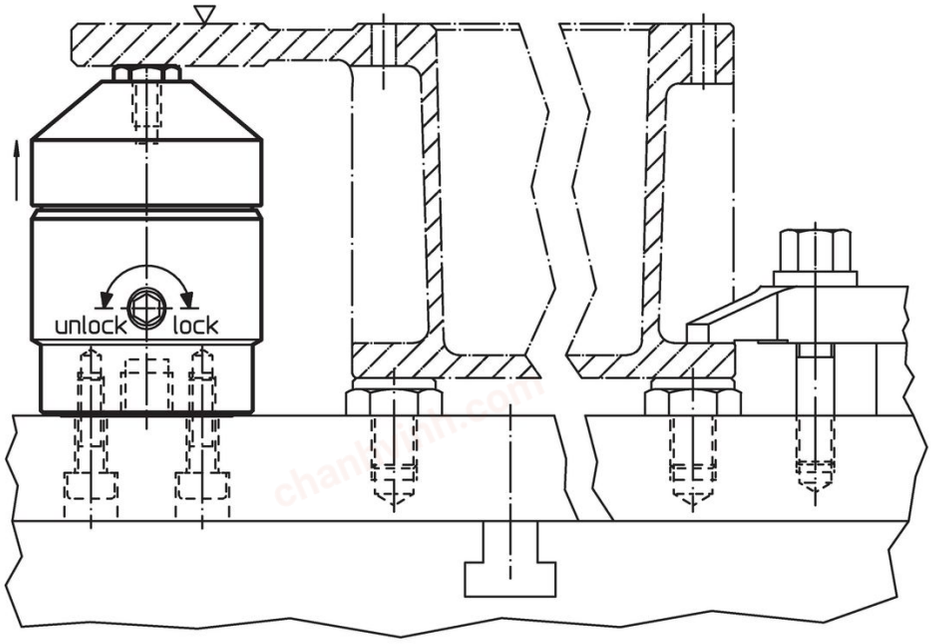

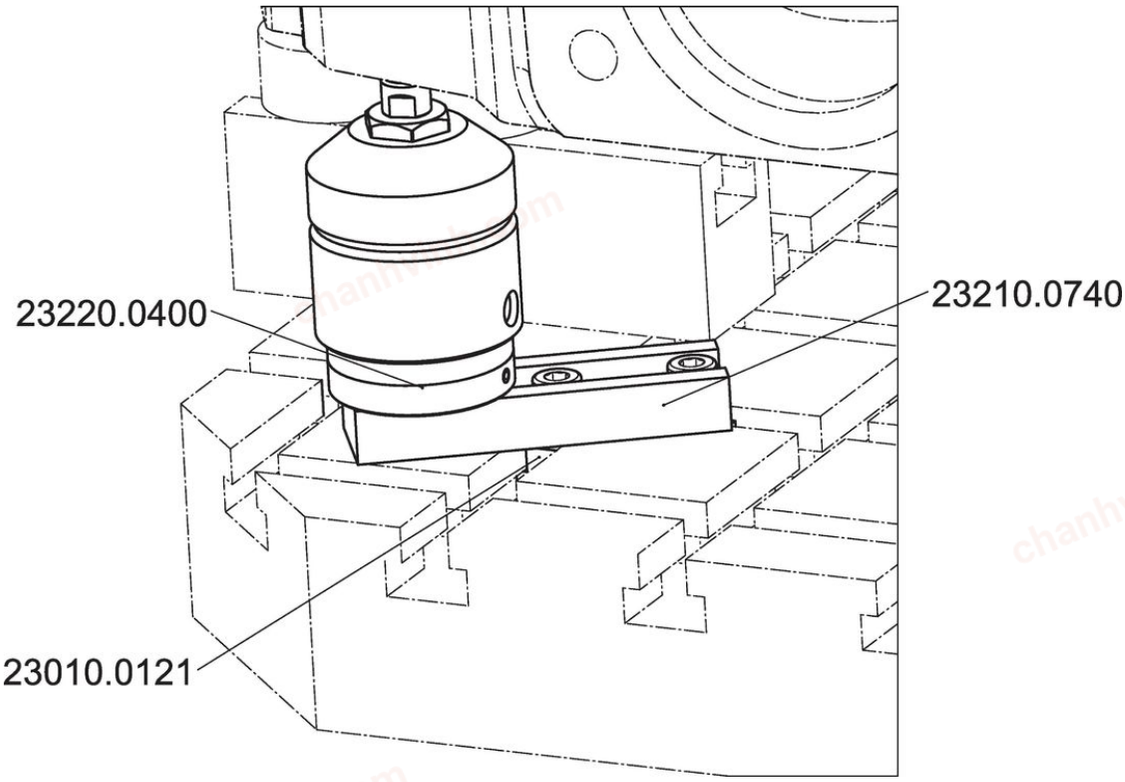

chanhvinh.com

Compliance

RoHS-compliant
Contains lead - compliant according to exceptions 6(a)-I / 6(b)-II / 6(c).

Contains SVHC substances >0,1% w/w
Contains lead - SVHC list [REACH] as of 04.02.2026.

SCIP-code
fb0d8335-3298-433f-8210-f740dcfe2e88

Contains Proposition 65 substances



Nickel can cause cancer from exposure. / Lead can lead to cancer, developmental disorders, and reproductive damage in men and to reproductive damage in women from exposure.
https://www.P65Warnings.ca.gov/

Free from Conflict Minerals
This product does not contain any substances designated as "conflict minerals" such as tantalum, tin, gold or tungsten from the Democratic Republic of Congo or adjacent countries.

POP-compliant
Contains no persistent organic pollutants – Stockholm Convention [POP] as of September 2025.

PFAS-compliant
Contains no per- and polyfluoroalkyl substances (PFAS).

TSCA-compliant
Agent concentration in this product does not exceed the specified threshold.