chanhvinh.com

Supporting Plates

EH 23210.



Product Description

Various seating elements (e.g. pins EH 22690. or self-aligning pads EH 22730., EH 22731. and EH 22740.) can be mounted on the supporting plates.
The supporting plate can be moved flexibly between two threads or T-slots.
Suitable for clamping devices M 20 - M 24.

Material

- Steel, case-hardened

Drawing

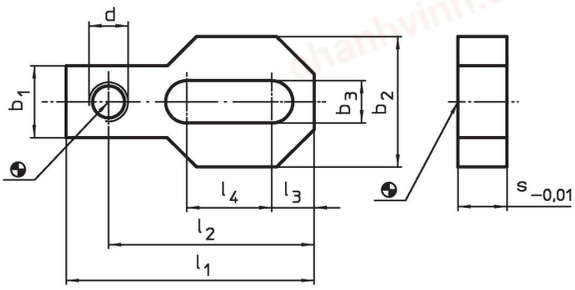

Order information

d	Dimensions [mm]								Weight [kg]	Art. No.
	l_1	l_2	l_3	l_4	b_1	b_2	b_3	s -0.01		
M20	180	150	30	80	60	90	21	**30**	2.8	23210.0870
M24	220	188	35	100	70	100	25	**30**	3.8	23210.0880

Application example

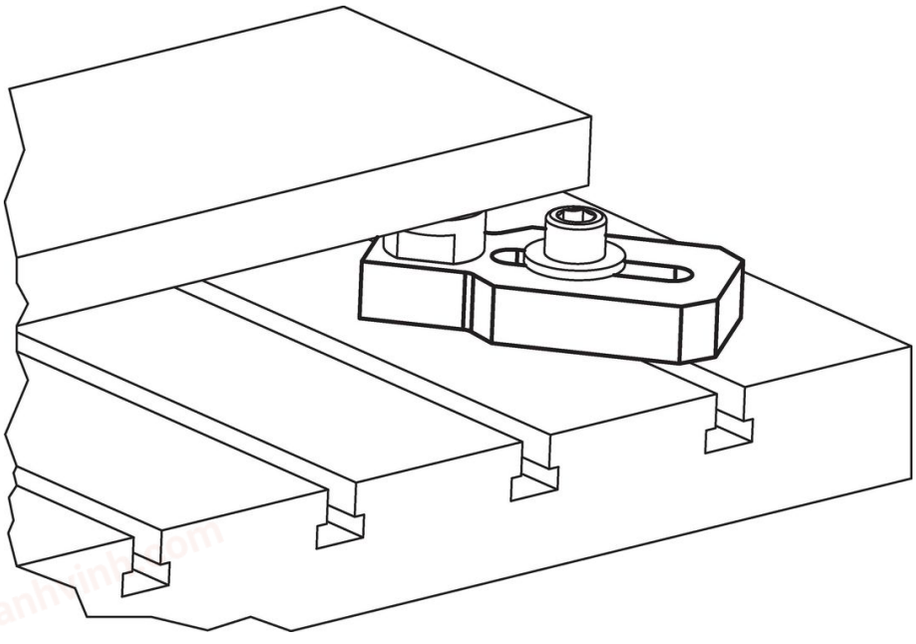

chanhvinh.com

Compliance

RoHS-compliant
Compliant with Directive 2011/65/EU [RoHS].

Does not contain SVHC substances
No SVHC substances with more than 0.1% w/w contained - SVHC list [REACH] as of 04.02.2026.

SCIP-code
N/A

Does not contain Proposition 65 substances
No Proposition 65 substances included.
https://www.P65Warnings.ca.gov/

Free from Conflict Minerals
This product does not contain any substances designated as "conflict minerals" such as tantalum, tin, gold or tungsten from the Democratic Republic of Congo or adjacent countries.

POP-compliant
Contains no persistent organic pollutants – Stockholm Convention [POP] as of September 2025.

PFAS-compliant
Contains no per- and polyfluoroalkyl substances (PFAS).

TSCA-compliant
Agent concentration in this product does not exceed the specified threshold.