chanhvinh.com

Clamps • with exchangeable soft jaw
EH 23190.



Product Description

This clamp (clamping claw) with exchangeable soft jaw is mainly used in mechanical clamping technology for clamping delicate workpieces.
The soft jaw made from brass or plastic protects the workpiece from damage.

Material

Soft jaw
- Brass
- plastic

Clamp
- Heat-treated steel, blackened

Assembly

The soft jaws are mounted or disassembled with two screws. These are included in the scope of delivery.

Drawing

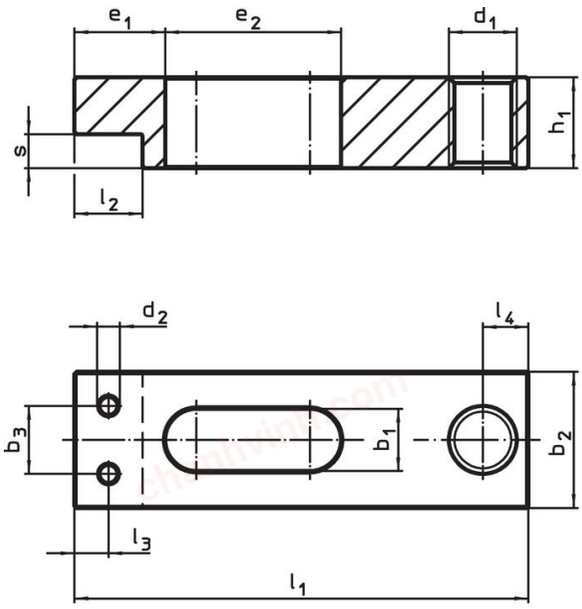

picture 1

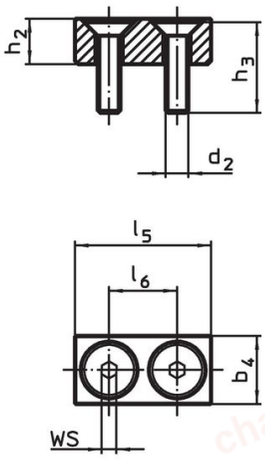

picture 2

Order information

Nominal dimension	Dimensions																	WS				Art. No.
b_1 +0.5	l_1	b_2	b_3	b_4	d_1	d_2	e_1	e_2	h_1	h_2	h_3	l_2	l_3	l_4	l_5	l_6	s		min.	max.		
[mm]	[mm]																	[mm]	[°C]			
plain clamp without soft jaw – picture 1																						
5.5	**40**	12	6	–	M 6	M 2	8	15.5	8	–	–	6	3.0	4	–	–	3	–	–	–	21.0 g	23190.0050
7.0	**50**	16	9	–	M 6	M2,5	10	22.0	10	–	–	8	4.0	5	–	–	4	–	–	–	46.0 g	23190.0051
9.0	**63**	20	11	–	M 8	M 3	12	29.0	12	–	–	10	5.0	6	–	–	4	–	–	–	86.0 g	23190.0052
11.0	**80**	25	14	–	M10	M 4	15	36.0	16	–	–	13	6.5	8	–	–	6	–	–	–	183.0 g	23190.0053
14.0	**100**	32	16	–	M12	M 5	18	44.0	20	–	–	16	8.0	10	–	–	8	–	–	–	366.0 g	23190.0054
18.0	**160**	50	30	–	M16	M 8	30	63.0	30	–	–	28	14.0	16	–	–	12	–	–	–	1.4 kg	23190.0055
soft jaw from brass – picture 2																						
5.5	–	–	–	6	–	M 2	–	–	–	4	8	–	–	–	12	6	–	1.3	–	250	3.8 g	23190.0060
7.0	–	–	–	8	–	M2,5	–	–	–	6	10	–	–	–	16	9	–	1.5	–	250	7.9 g	23190.0061
9.0	–	–	–	10	–	M 3	–	–	–	6	12	–	–	–	20	11	–	2.0	–	250	12.0 g	23190.0062
11.0	–	–	–	13	–	M 4	–	–	–	9	16	–	–	–	25	14	–	2.5	–	250	26.0 g	23190.0063
14.0	–	–	–	16	–	M 5	–	–	–	12	20	–	–	–	32	16	–	3.0	–	250	53.0 g	23190.0064
18.0	–	–	–	28	–	M 8	–	–	–	16	30	–	–	–	50	30	–	5.0	–	250	188.0 g	23190.0065

chanhvinh.com

Nominal dimension b_1 +0.5 [mm]	Dimensions [mm]																	WS [mm]	[°C] min.	[°C] max.		Art. No.
	l_1	b_2	b_3	b_4	d_1	d_2	e_1	e_2	h_1	h_2	h_3	l_2	l_3	l_4	l_5	l_6	s					
soft jaw from plastic – picture 2																						
5.5	–	–	–	6	–	M 2	–	–	–	4	8	–	–	–	12	6	–	1.3	0	50	2.3 g	23190.0070
7.0	–	–	–	8	–	M2,5	–	–	–	6	10	–	–	–	16	9	–	1.5	0	50	3.4 g	23190.0071
9.0	–	–	–	10	–	M 3	–	–	–	6	12	–	–	–	20	11	–	2.0	0	50	4.1 g	23190.0072
11.0	–	–	–	13	–	M 4	–	–	–	9	16	–	–	–	25	14	–	2.5	0	50	7.4 g	23190.0073
14.0	–	–	–	16	–	M 5	–	–	–	12	20	–	–	–	32	16	–	3.0	0	50	14.0 g	23190.0074
18.0	–	–	–	28	–	M 8	–	–	–	16	30	–	–	–	50	30	–	5.0	0	50	49.0 g	23190.0075

Application example

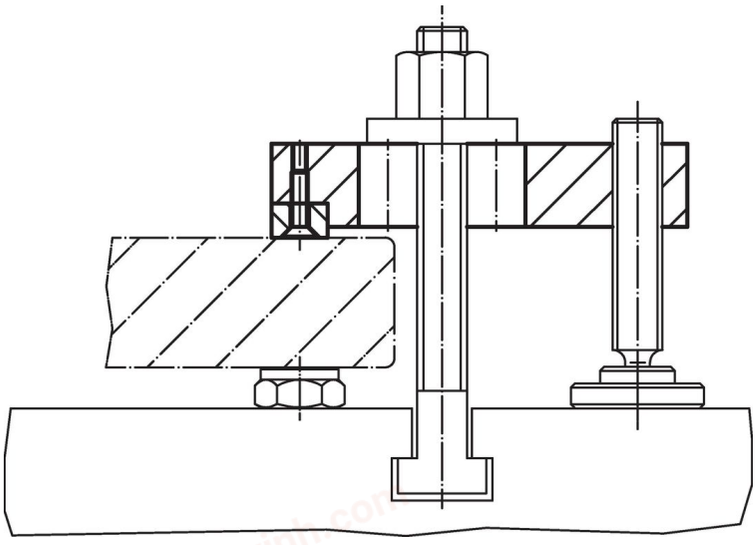

Compliance

For detailed compliance information please select the desired article number.