chanhvinh.com

Clamps • with nose
EH 23180.



Product Description

This clamp (clamping claw) with nose is mainly used in mechanical clamping technology for clamping workpieces.

Material

- Heat-treated steel, tempered, blackened

Drawing

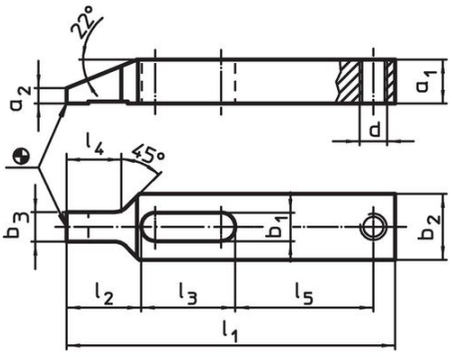

picture 1

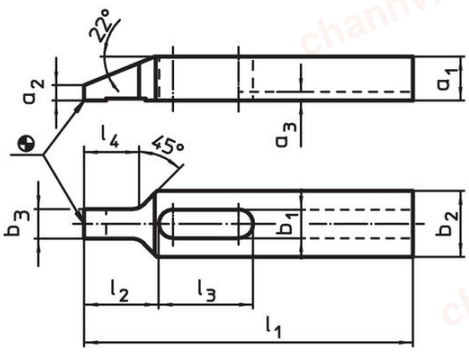

picture 2

Order information

Nominal dimension b_1 [mm]	Dimensions [mm]												Art. No.
	l_1	a_1	a_2	a_3	b_2	b_3	d	l_2	l_3	l_4	l_5		
with thread for adjusting screw – picture 1													
6.6	**80**	8	2.5	–	15	7.5	M 6	17	23	13	34	54.0 g	23180.0107
9.0	**100**	12	4.0	–	20	9.5	M 8	22	29	17	42	133.0 g	23180.0109
11.0	**125**	15	5.0	–	25	11.5	M10	28	36	21	52	261.0 g	23180.0111
13.0	**150**	20	7.0	–	30	13.5	M12	34	43	25	63	504.0 g	23180.0113
17.0	**175**	25	9.0	–	35	15.5	M16	40	52	29	70	828.0 g	23180.0117
with keyway – picture 2													
6.6	**80**	8	2.5	2.5	15	7.5	–	17	23	13	–	50.0 g	23180.0207
9.0	**100**	12	4.0	3.0	20	9.5	–	22	29	17	–	127.0 g	23180.0209
11.0	**125**	15	5.0	3.5	25	11.5	–	28	36	21	–	251.0 g	23180.0211
13.0	**150**	20	7.0	4.0	30	13.5	–	34	43	25	–	488.0 g	23180.0213
17.0	**175**	25	9.0	4.5	35	15.5	–	40	52	29	–	812.0 g	23180.0217
22.0	**225**	35	15.5	5.5	50	19.5	–	52	62	33	–	2.2 kg	23180.0222
26.0	**250**	40	17.5	5.5	60	21.5	–	60	71	36	–	3.3 kg	23180.0226

chanhvinh.com

Application example

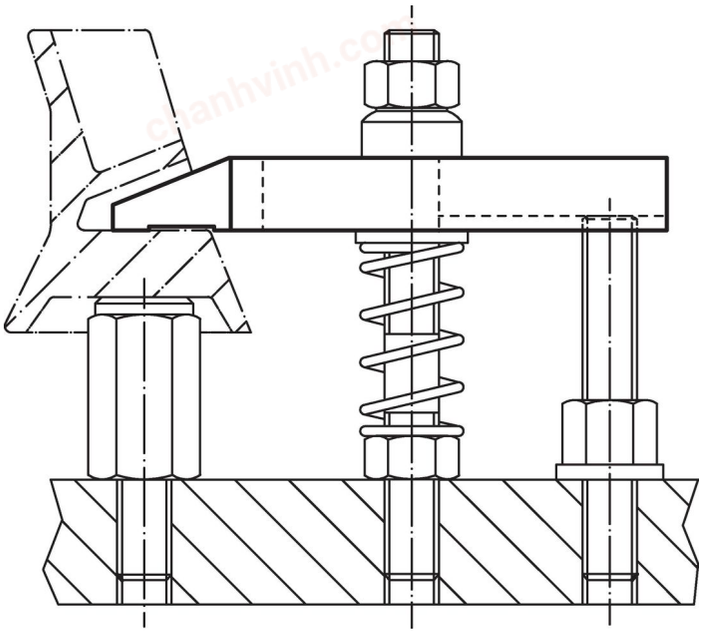

Compliance

RoHS-compliant
Compliant with Directive 2011/65/EU [RoHS].

Does not contain SVHC substances
No SVHC substances with more than 0.1% w/w contained - SVHC list [REACH] as of 04.02.2026.

SCIP-code
N/A

Contains Proposition 65 substances



Nickel can cause cancer from exposure.
https://www.P65Warnings.ca.gov/

Free from Conflict Minerals
This product does not contain any substances designated as "conflict minerals" such as tantalum, tin, gold or tungsten from the Democratic Republic of Congo or adjacent countries.

POP-compliant
Contains no persistent organic pollutants – Stockholm Convention [POP] as of September 2025.

PFAS-compliant
Contains no per- and polyfluoroalkyl substances (PFAS).

TSCA-compliant
Agent concentration in this product does not exceed the specified threshold.