chanhvinh.com

Clamps • with flat-faced ball, similar to DIN 6314
EH 23180.



Product Description

This clamp (clamping claw) according to DIN 6314 with flat-faced ball is mainly used in mechanical clamping technology for clamping workpieces.

Material

Ball
- Ball-bearing steel, hardened, bright

Clamp
- Heat-treated steel, blackened

More information

Notes

Ball protected against rotating.

Drawing

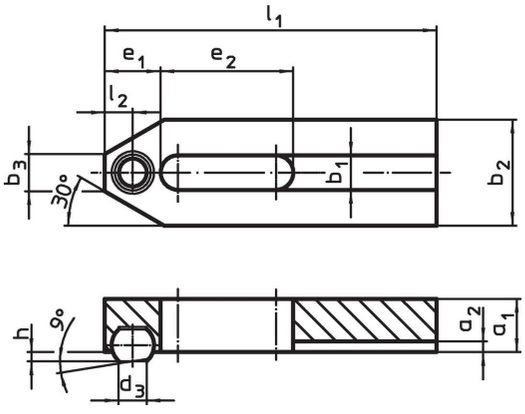

Order information

Nominal dimension b_1	Dimensions												Art. No.
	l_1	d_3	a_1	a_2	b_2	b_3	e_1	e_2	h	l_2	Ball diameter		
[mm]	[mm]											[g]	
6.6	**50**	5.8	10	2.5	20	8	10	20	1.6	5.0	8.5	61	23180.0007
9.0	**60**	7.2	12	3.0	25	10	13	22	2.0	6.5	10.0	109	23180.0009
11.0	**80**	8.6	15	3.5	30	12	15	30	2.7	7.5	12.0	219	23180.0011
13.0	**125**	10.5	20	4.0	40	14	21	50	3.5	10.5	16.0	618	23180.0014

chanhvinh.com

Application example

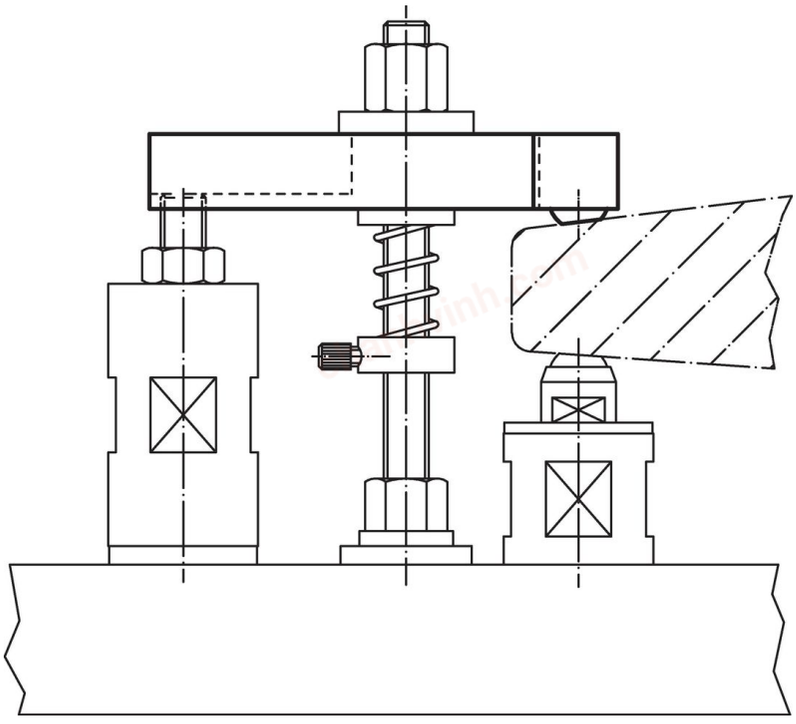

Compliance

For detailed compliance information please select the desired article number.