chanhvinh.com

Clamps • with nose, closed
EH 23170.



Product Description

This clamp (clamping claw) according to DIN 6317 with nose is mainly used in mechanical clamping technology for clamping workpieces. Due to the closed design of the clamp, it is suitable for use with rotating workpieces.
Thanks to the closed slot, the clamp is suitable for an application with rotating workpieces.

Material

- Heat-treated steel, varnished

Drawing

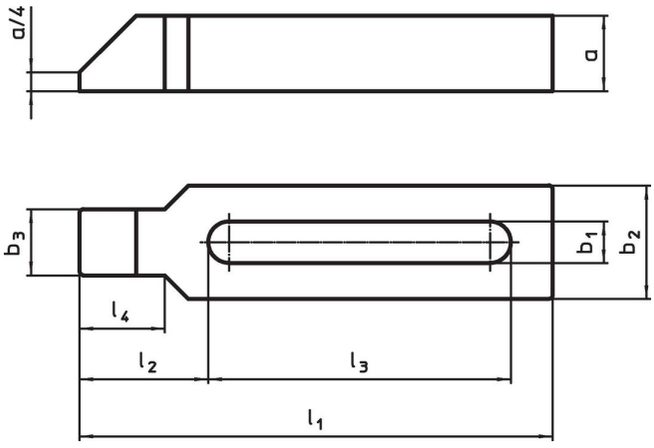

Order information

Nominal dimension b_1	Dimensions							For screws			Art. No.
	l_1	a	b_2	b_3	l_2	l_3	l_4				
[mm]	[mm]							[mm]	[in]	[kg]	
22	**250**	40	60	35	68	160	45	M20, M22	3/4	3.0	23170.0022
22	**315**	40	60	35	68	220	45	M20, M22	3/4	3.8	23170.0023
26	**250**	40	70	43	83	140	56	M24	1	3.6	23170.0026
26	**315**	40	70	43	83	200	56	M24	1	4.6	23170.0027
26	**500**	50	70	43	83	370	56	M24	1	9.5	23170.0029
33	**315**	50	80	50	88	200	56	M30	1 1/4	6.2	23170.0030
33	**400**	50	80	50	88	283	56	M30	1 1/4	7.8	23170.0031

chanhvinh.com

Application example

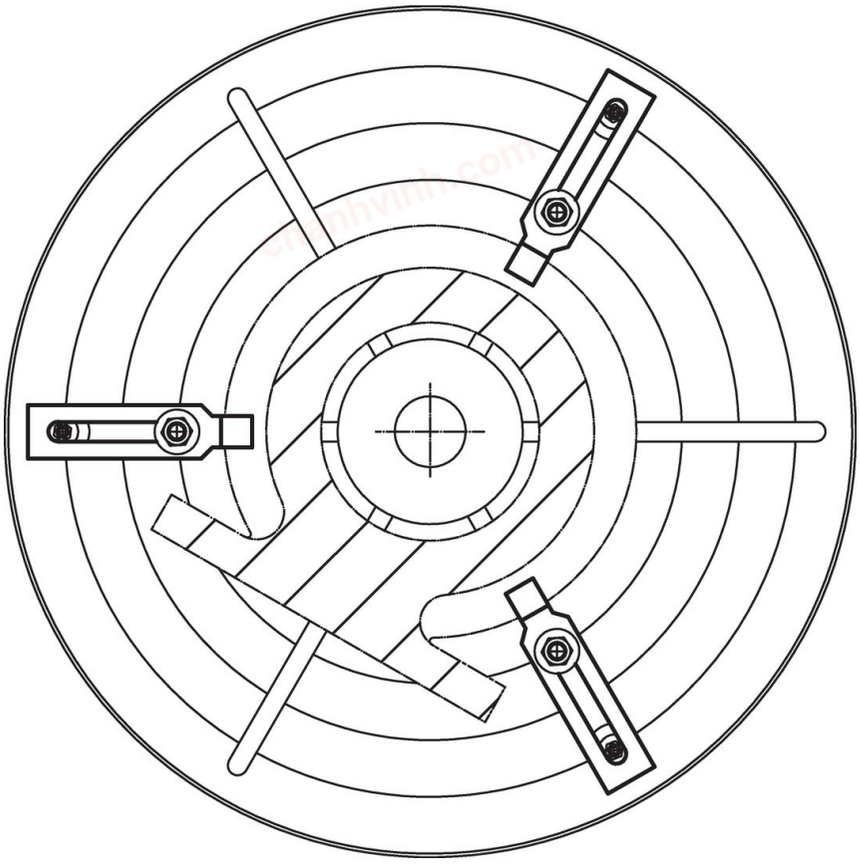

Compliance

RoHS-compliant
Compliant with Directive 2011/65/EU [RoHS].

Does not contain SVHC substances
No SVHC substances with more than 0.1% w/w contained - SVHC list [REACH] as of 04.02.2026.

SCIP-code
N/A

Does not contain Proposition 65 substances
No Proposition 65 substances included.
https://www.P65Warnings.ca.gov/

Free from Conflict Minerals
This product does not contain any substances designated as "conflict minerals" such as tantalum, tin, gold or tungsten from the Democratic Republic of Congo or adjacent countries.

POP-compliant
Contains no persistent organic pollutants – Stockholm Convention [POP] as of September 2025.

PFAS-compliant
Contains no per- and polyfluoroalkyl substances (PFAS).

TSCA-compliant
Agent concentration in this product does not exceed the specified threshold.