chanhvinh.com

Clamps • stepped

EH 23160.



Product Description

This clamp (clamping claw) according to DIN 6314 B is stepped and is mainly used in mechanical clamping technology for clamping workpieces.

Material

- Heat-treated steel, tempered, blackened

Drawing

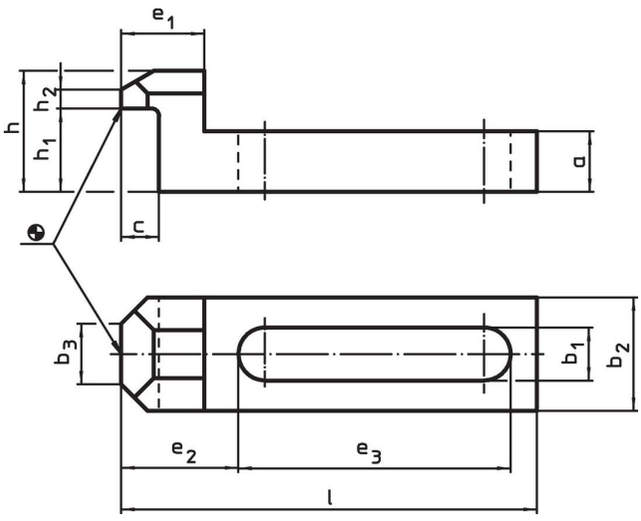

Order information

Nominal dimension b_1	Dimensions											For screws			Art. No.
	l	a	b_2	b_3	c	e_1	e_2	e_3	h	h_1	h_2				
[mm]	[mm]											[mm]	[in]	[g]	
6.6	**55**	8	15	8	5	11	15.5	36	16	11	2	M 6	1/4	39	23160.0107
9.0	**70**	10	20	10	8	15	19.5	46	20	14	3	M 8	5/16	80	23160.0109
11.0	**90**	13	25	12	10	19	26.5	58	25	18	4	M10	3/8	168	23160.0111
13.0	**115**	16	30	15	12	24	32.5	75	32	23	5	M12	1/2	327	23160.0113
17.0	**145**	20	40	20	14	29	38.5	99	40	28	6	M16	5/8	682	23160.0117

chanhvinh.com

Application example

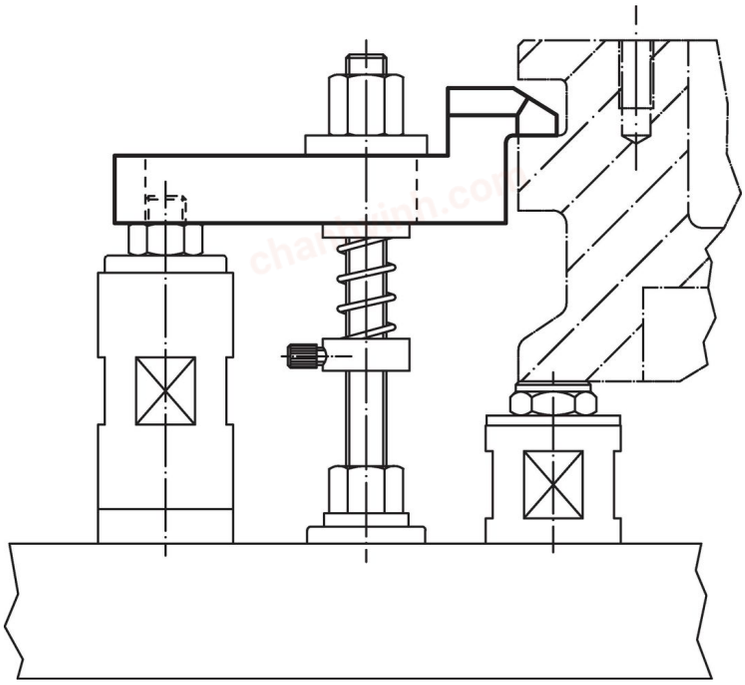

Compliance

RoHS-compliant
Compliant with Directive 2011/65/EU [RoHS].

Does not contain SVHC substances
No SVHC substances with more than 0.1% w/w contained - SVHC list [REACH] as of 04.02.2026.

SCIP-code
N/A

Contains Proposition 65 substances

Nickel can cause cancer from exposure.
https://www.P65Warnings.ca.gov/

Free from Conflict Minerals
This product does not contain any substances designated as "conflict minerals" such as tantalum, tin, gold or tungsten from the Democratic Republic of Congo or adjacent countries.

POP-compliant
Contains no persistent organic pollutants – Stockholm Convention [POP] as of September 2025.

PFAS-compliant
Contains no per- and polyfluoroalkyl substances (PFAS).

TSCA-compliant
Agent concentration in this product does not exceed the specified threshold.